Instruction Book
SKYLINE S7

IMPORTANT SAFETY INSTRUCTIONS

When using an electrical appliance, basic safety precautions should always be followed, including the following:

This sewing machine is designed and manufactured for household use only.

Read all instructions before using this sewing machine.

DANGER— To reduce the risk of electric shock:

1. An appliance should never be left unattended when plugged in. Always unplug this sewing machine from the electric outlet immediately after using and before cleaning.

WARNING— To reduce the risk of burns, fire, electric shock, or injury to persons:

1. Do not allow to be used as a toy. Close attention is necessary when this sewing machine is used by or near children.
2. Use this appliance only for its intended use as described in this owner's manual.
   Use only attachments recommended by the manufacturer as contained in this owner's manual.
3. Never operate this sewing machine if it has a damaged cord or plug, if it is not working properly, if it has been dropped or damaged, or dropped into water.
   Return this sewing machine to the nearest authorized dealer or service center for examination, repair, electrical or mechanical adjustment.
4. Never operate the appliance with any air opening blocked. Keep ventilation openings of this sewing machine and foot controller free from accumulation of lint, dust and loose cloth.
5. Never drop or insert any object into any opening.
6. Do not use outdoors.
7. Do not operate where aerosol (spray) products are being used or where oxygen is being administered.
8. To disconnect, turn all controls to the off ("O") position, then remove plug from outlet.
9. Do not unplug by pulling on cord. To unplug, grasp the plug, not the cord.
10. Keep fingers away from all moving parts. Special care is required around the sewing machine needle and/or cutting blade.
11. Always use the proper needle plate. The wrong plate can cause the needle to break.
12. Do not use bent needles.
13. Do not pull or push fabric while stitching. It may deflect the needle causing it to break.
14. Switch this sewing machine off ("O") when making any adjustment in the needle area, such as threading the needle, changing the needle, threading the bobbin or changing the presser foot, and the like.
15. Always unplug this sewing machine from the electrical outlet when removing covers, lubricating, or when making any other adjustments mentioned in this owner's manual.

SAVE THESE INSTRUCTIONS

For Europe only:
This appliance can be used by children aged from 8 years and above and persons with reduced physical, sensory or mental capabilities or lack of experience and knowledge if they have been given supervision or instruction concerning use of the appliance in a safe way and understand the hazards involved. Children shall not play with the appliance. Cleaning and user maintenance shall not be made by children without supervision.

For outside Europe (except U.S.A.):
This appliance is not intended for use by persons (including children) with reduced physical, sensory or mental capabilities, or lack of experience and knowledge, unless they have been given supervision or instruction concerning use of the appliance by a person responsible for their safety. Children should be supervised to ensure that they do not play with the appliance.

Please note that on disposal, this product must be safely recycled in accordance with relevant National legislation relating to electrical/electronic products. If in doubt please contact your retailer for guidance. (EEA (European Economic Area) and UK)

TABLE OF CONTENTS

ESSENTIAL PARTS

Names of Parts....4
Standard Accessories....5
Guide Sticker for Threading....6
Accessory Storage....7
Extension Table....7
  Free-arm sewing....7

GETTING READY TO SEW

Connecting the Power Supply....8
  Using start/stop button....8
Before Using Your Sewing Machine....8
  Operating Instructions:....8
  Using foot control....9
Controlling Sewing Speed....9
  Speed control slider....9
  Foot Control....9
Machine Operating Buttons....10
Touch Panel Keys....11
Winding the Bobbin....12
Threading the Machine....15
Built-in Needle Threader....16
Drawing Up the Bobbin Thread....17
Replacing Needles....18
Fabric and Needle Chart....18
Replacing the Presser Foot....19
Removing and Attaching the Foot Holder....20
Attaching the Dual feed foot AD....21
Attaching the Ruler work foot QR (Optional)....21
Attaching the Darning foot PD-H....21
Attaching the Professional grade foot HP (Optional)....21
Replacing the Needle Plate....22
Raising and Lowering the Presser Foot....23
Knee Lifter....23
Dropping the Feed Dogs....24

ORDINARY SEWING MODE

Ordinary Stitch Patterns....25
Function Keys in Ordinary Sewing Mode....26
Utility Stitches....28
Straight Stitches....28
Sewing from the Edge of Thick Fabric....28
Changing Sewing Direction....28
Turning a Square Corner....28
Securing Seams....29
Cutting Threads....29
Needle Plate Guides....29
Variety of Straight Stitches....30
Sewing with the Dual Feed Device....31
Sewing with the Professional grade foot HP (Optional)....32
Zigzag Stitches....33
Variety of Overcasting Stitches....34
Manual Stitch Settings....35
Adjusting Thread Tension....36
Adjusting Foot Pressure Control....36
Foot up for Pivoting....36
Favorite Stitch Adjustment....37
Other Utility Stitches....38

BUTTONHOLES AND SPECIALTY STITCHES

Variety of Buttonholes....40
B1 Sensor (Square) Buttonhole....41
Double layer buttonhole....43
Using the Stabilizer Plate....45
B2 Automatic (square) Buttonhole....46
Other Buttonholes....48
B11 Welted Buttonhole (Bound Buttonhole)....49
Corded Buttonhole....51
Speciality Stitches....52
B13 Darning....52
B15 Fly Stitch....53
B16-B18 Eyelets....53

DECORATIVE STITCHES

Decorative Stitches....54
Quilting (Q)....60
  Using the Quilting Guide Bar....60
  Q1-Q3 Patchwork Piecing....60
  Angle Scales on the Needle Plate....60
  Q71-Q74 Hand-look Quilt Stitches....61
S1-S24 Decorative Satin Stitches....61
  Elongation Ratio....61
Created Stitches (CS)....62
Twin Needle Sewing....63

PROGRAMMING A PATTERN COMBINATION

Mirror Image of Patterns....64
Bridge Stitches....64
Editing a Pattern Combination....65
  Deleting a Pattern....65
  Inserting a Pattern....65
Startover Key....66
Checking Pattern Combination Length....67
Tapering....68

MONOGRAMMING

Function Keys....73
Manual Thread Tension....74
  Individual Thread Tension Adjustment....74
  Unified Thread Tension Adjustment....74
Spacing....74
Reducing the Size of Letters....74
Programming a Monogram....75
Saving a Pattern Combination....76
Opening a Pattern Combination....77

SEWING APPLICATION

Sewing Application 78
Seaming 79
Overedge 80
Blind Hem 81
Shell Tuck 82
Rolled Hem 83
Zipper Sewing 84
CONCEAL® Zipper (Optional) 87
Gathering 89
Basting 89
Button Sewing 90
Tacking 91
Applique 92
Patchwork 93
Quilting, Variable Zigzag and Ruler Work 94
Straight Stitches (with dual feed) 94
Clasp Stitches 94
Free Quilting 95
One Stitch Off 95
Foot Height for Free Motion Quilting 95
Sculpture Stitches 95
Hand-look Quilt Stitches 96
Variable Zigzag 96
Maximum Zigzag Width Adjustment 96
Ruler Work (Optional) 97

CUSTOMIZING MACHINE SETTINGS

Machine Setting Mode 98
Common Setting Mode 98
Ordinary Sewing Setting Mode 101
Language Selection Mode 104
Correcting Distorted Stitch Patterns 104

CARE AND MAINTENANCE

Cleaning the Hook Area 105
Cleaning the Inside of the Thread Guide 106
Problems and Warning Signals 107
Troubleshooting 108
Formatting USB Flash Drives 109
Stitch Chart 111
Stitch Chart (Monogram) 113

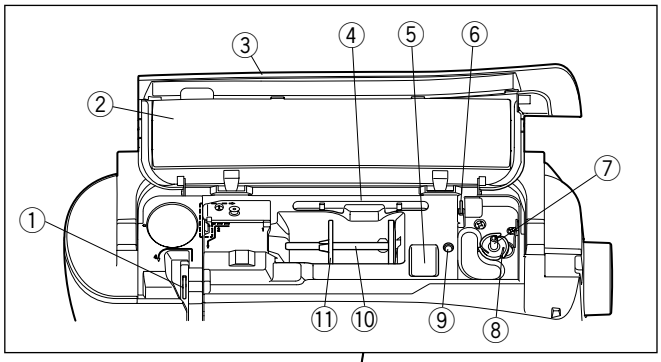

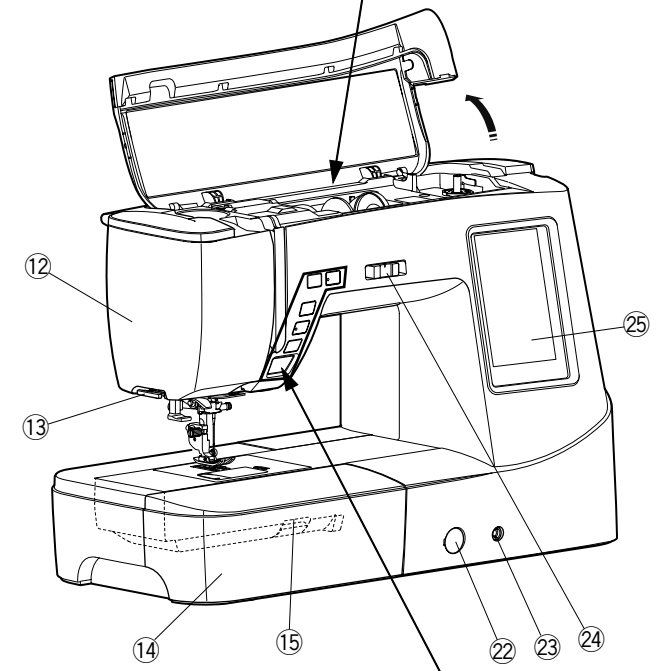

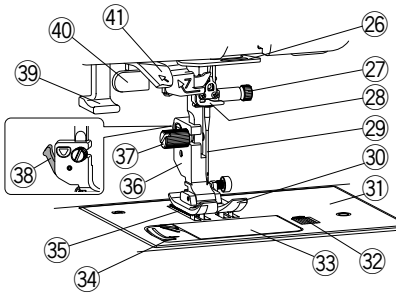

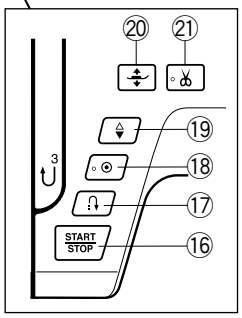

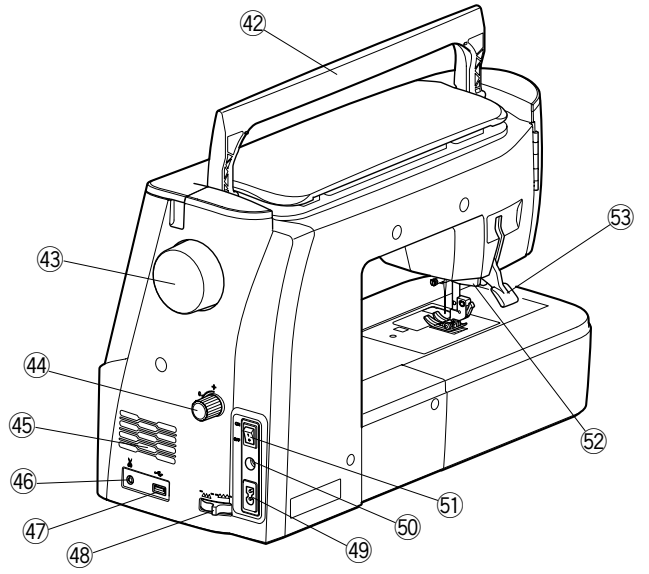

ESSENTIAL PARTS

Names of Parts

① Thread take-up lever
② Reference chart
③ Top cover
④ Touch panel stylus holder
⑤ Foot storage compartment
⑥ Bobbin thread cutter B
⑦ Bobbin winder spindle
⑧ Bobbin thread cutter A
⑨ Hole for extra spool pin
⑩ Spool pin
⑪ Spool holder (large)
⑫ Face cover
⑬ Thread cutter
⑭ Extension table (accessory storage)
⑮ Needle plate release lever
⑯ Start/stop button
⑰ Reverse button
⑱ Auto-lock button
⑲ Needle up/down button
⑳ Presser foot lifter button
㉑ Thread cutter button
㉒ Feed balancing dial
㉓ Knee lifter socket
㉔ Speed control slider
㉕ Visual touch screen
㉖ Lower thread guide
㉗ Needle clamp screw
㉘ Needle bar thread guide
㉙ Needle
㉚ Zigzag foot A
㉛ Needle plate
㉜ Hook cover release button
㉝ Hook cover plate
㉞ Thread cutter
㉟ Feed dogs
㊱ Foot holder
㊲ Thumbscrew
㊳ Lever
㊴ Needle threader lever
㊵ Buttonhole lever
㊶ Needle threader guide
㊷ Carrying handle
㊸ Handwheel
㊹ Dual feed balancing dial
㊺ Ventilation openings
㊻ Thread cutter switch jack*
㊼ USB port
㊽ Drop feed lever
㊾ Machine socket
㊿ Foot control jack
(51) Power switch
(52) Dual feed drive
(53) Presser foot lifter

NOTE:
- To carry the sewing machine, hold the carrying handle with your hand, and support the sewing machine with the other hand.
- Sewing machine design and specifications are subject to change without prior notice.

* Thread cutter switch is an optional item.

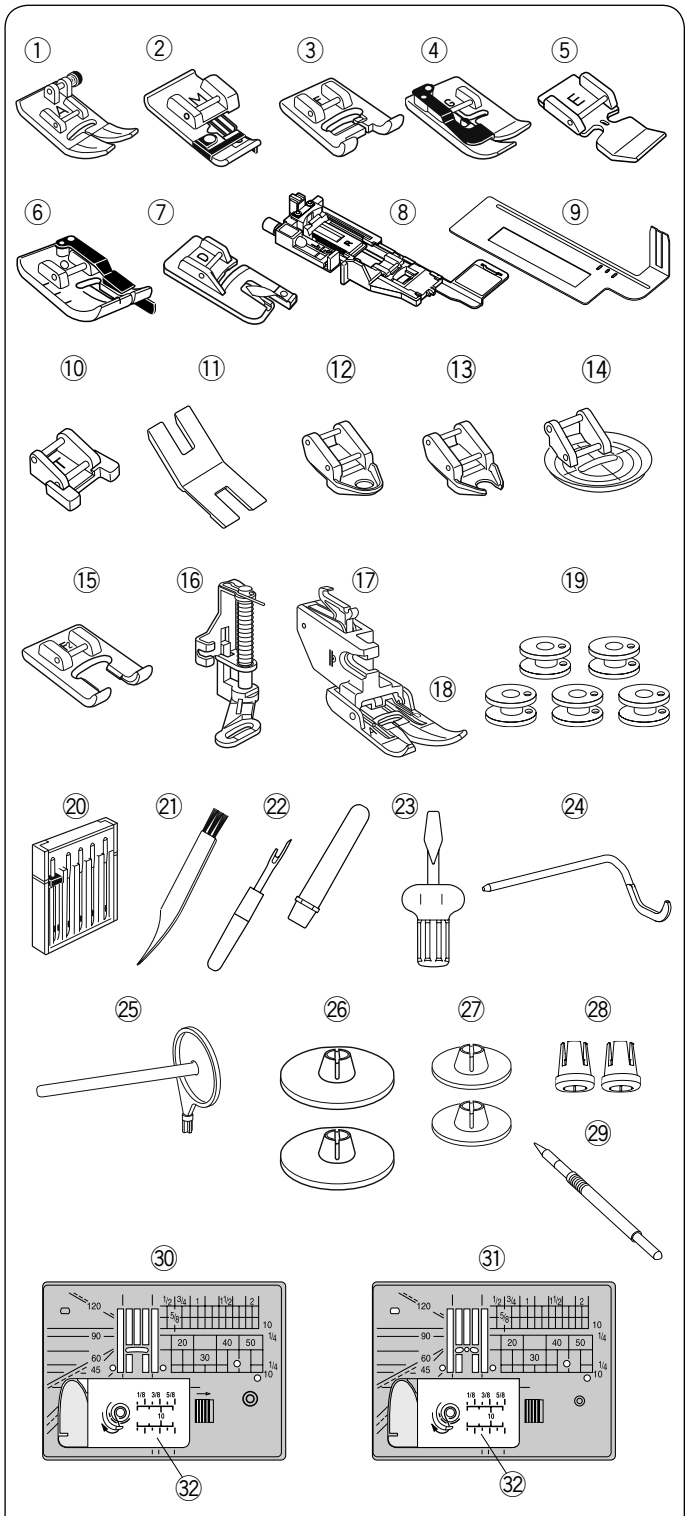

Standard Accessories

No.	Part Name	Part No.
1	Zigzag foot A (set on the machine)	859802006
2	Overcasting foot M	859810007
3	Satin stitch foot F	859806011
4	Blind hemming foot G	859807001
5	Zipper foot E	859805009
6	1/4″ seam foot O	859814012
7	Rolled hem foot D	859804008
8	Automatic buttonhole foot R (in the accessory storage)	862822013
9	Stabilizer plate (in the accessory storage)	859832016
10	Button sewing foot T	859811008
11	Button shank plate	832820007
12	Free motion quilting closed-toe foot QC	859836009
13	Free motion quilting open-toe foot QO	859837000
14	Free motion quilting zigzag foot QV	859812009
15	Open toe satin stitch foot F2	859813000
16	Darning foot PD-H	859839002
17	Dual feed holder (twin) (in the accessory storage)	859817015
18	Dual feed foot AD (twin) (in the accessory storage)	859819109
19	Bobbin x 5* (1 is set on the machine)	102261103
20	Needle set	859856005
21	Lint brush	802424004
22	Seam ripper (buttonhole opener)	647808009
23	Screwdriver	820832005
24	Quilting guide bar	755802001
25	Extra spool pin	809041004
26	Spool holder (large) x 2* (1 is set on the machine)	822020503
27	Spool holder (small) x 2*	822019509
28	Spool holder (special) x 2*	862408008
29	Touch panel stylus	860194002
30	Needle plate (set on the machine)	861606016
31	Straight stitch needle plate	862817118
32	Hook cover plate	809136100

* This is the part number for a single item (not for a set).

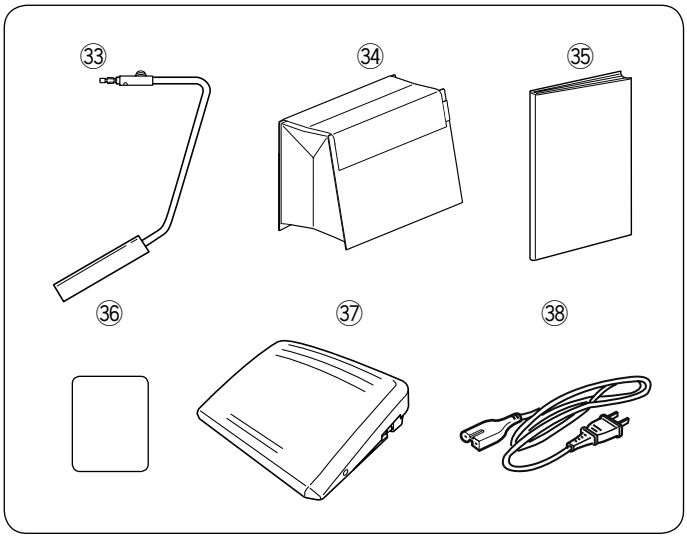

Standard Accessories

No.	Part Name		Part No.
33	Knee lifter		846417011
34	Semi-hard fabric cover		863422001
35	Instruction book		863850806
36	Threading guide sticker		101506A09
37	Foot control		043170108
38	Power cable*	U.S.A. and Canada	856519004
		U.K.	830377008
		Australia	830314018
		Continental Europe	830335004

* The power cable included may differ from the illustration.

Instructional Video

https://youtube.com/playlist?list=PLQy563Wz2actup8Vej1yFupSV4EVJGliO&si=uf1ugZR-iCCbtzr0

Download application for PC

StitchComposer

You can design and create your own stitch patterns.

https://www7.janome.co.jp/global/product/softwareapps/stitchcomposer-for-new-download/

* This application is for PC only.

Example

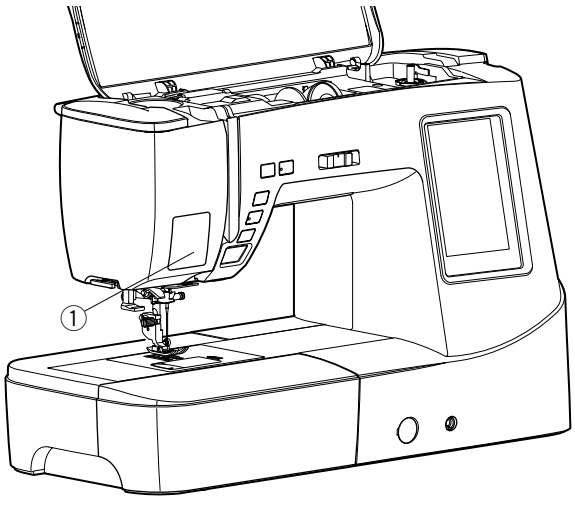

Guide Sticker for Threading

There is a threading guide sticker in the standard accessories. If you wish, you can attach the sticker on the machine to check the threading procedure.

① Threading guide sticker

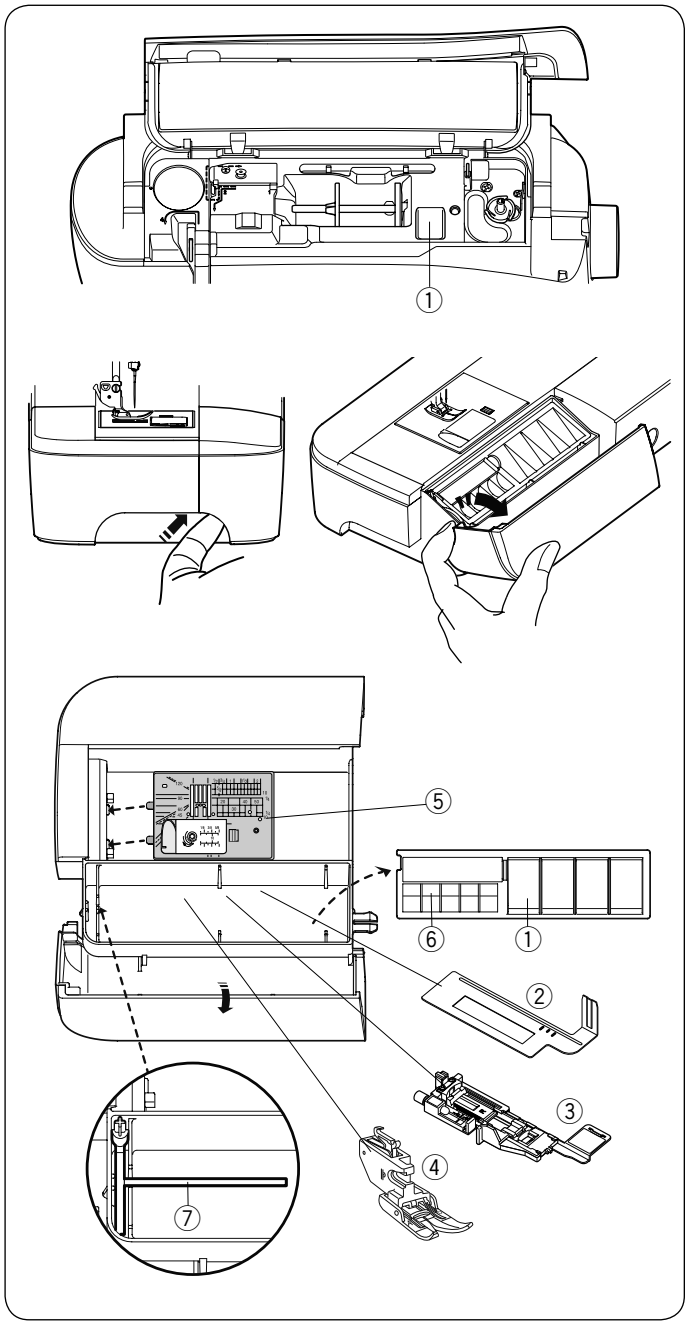

Accessory Storage

The accessories can be conveniently stored in the compartment of the extension table and the compartment under the top cover.

To store the accessories in the compartment of the extension table, push up the cover towards you to open the accessory storage.

① Presser foot
② Stabilizer plate
③ Automatic buttonhole foot R
④ Dual feed foot AD (twin)
⑤ Straight stitch needle plate
⑥ Bobbin
⑦ Extra spool pin

Other accessories can be also stored in the compartment in the extension table.

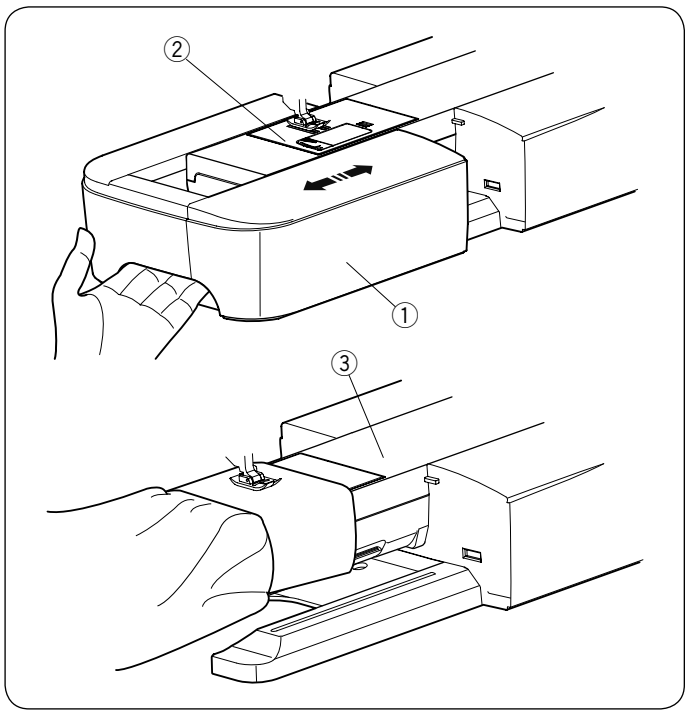

Extension Table

The extension table provides an extended sewing area and can be removed for free-arm sewing.

① Extension table
② Free-arm

To detach:
Draw the table out to the left.

To attach:
Slide the table on the base and push the table to the right.

Free-arm sewing

Free-arm sewing is used for stitching sleeves, waistbands, pant legs or any other tubular garments. It is also useful for darning socks or mending knees or elbows.

③ Free-arm

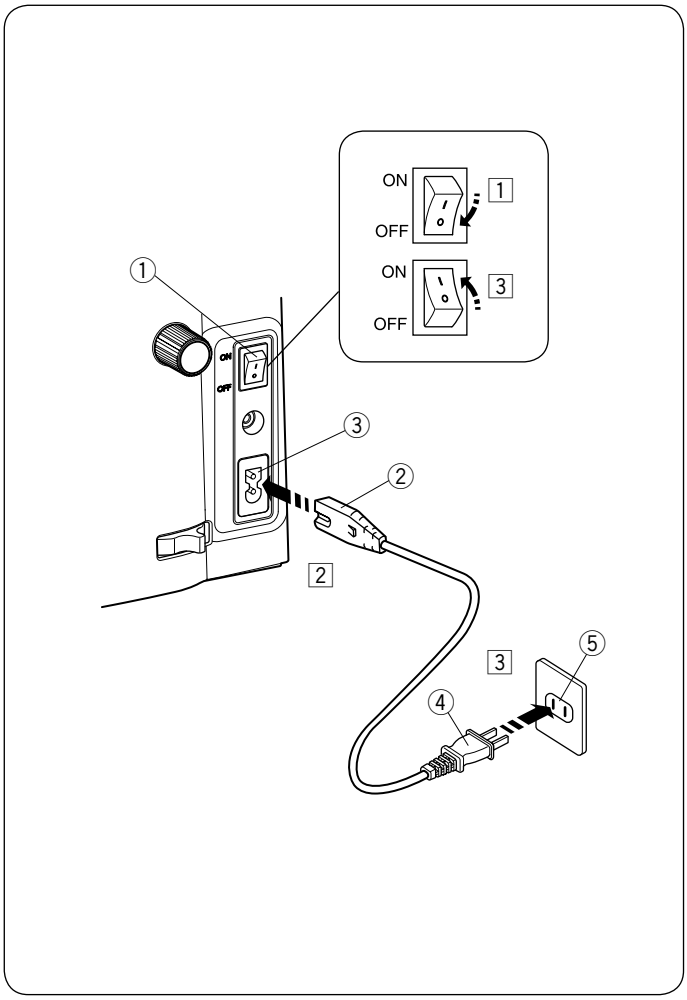

GETTING READY TO SEW

Connecting the Power Supply

Using start/stop button

1 First make sure the power switch ① is OFF.
2 Insert the machine plug ② of the power supply cord into the machine socket ③.
3 Insert the power supply plug ④ into the wall outlet ⑤, and turn the power switch ① ON.

① Power switch
② Machine plug
③ Machine socket
④ Power supply plug
⑤ Wall outlet

NOTE:
Make sure to use the power supply cable that came with the machine.
If you turn the power switch OFF, wait for 5 seconds before turning it on again.

⚠ WARNING:
While in operation, always keep your eyes on the sewing area, and do not touch any moving parts such as the thread take-up lever, handwheel or needle.
Always turn the power switch OFF and unplug the machine from the power supply:
- when leaving the machine unattended.
- when attaching or removing parts.
- when cleaning the machine.

Do not place anything on the foot control.

Before Using Your Sewing Machine

Before using your sewing machine for the first time, place a scrap of fabric under the presser foot and run the machine for a few minutes. Wipe away any oil which may appear.

Operating Instructions:

The symbol “O” on a switch indicates the “OFF” position of the switch.

For the U.S.A. and Canada only
Polarized plug (one blade wider than the other):
To reduce the risk of electric shock, this plug is intended to fit in a polarized outlet only one way. If it does not fit fully in the outlet, reverse the plug. If it still does not fit, contact a qualified electrician to install the proper outlet. Do not modify the plug in any way.

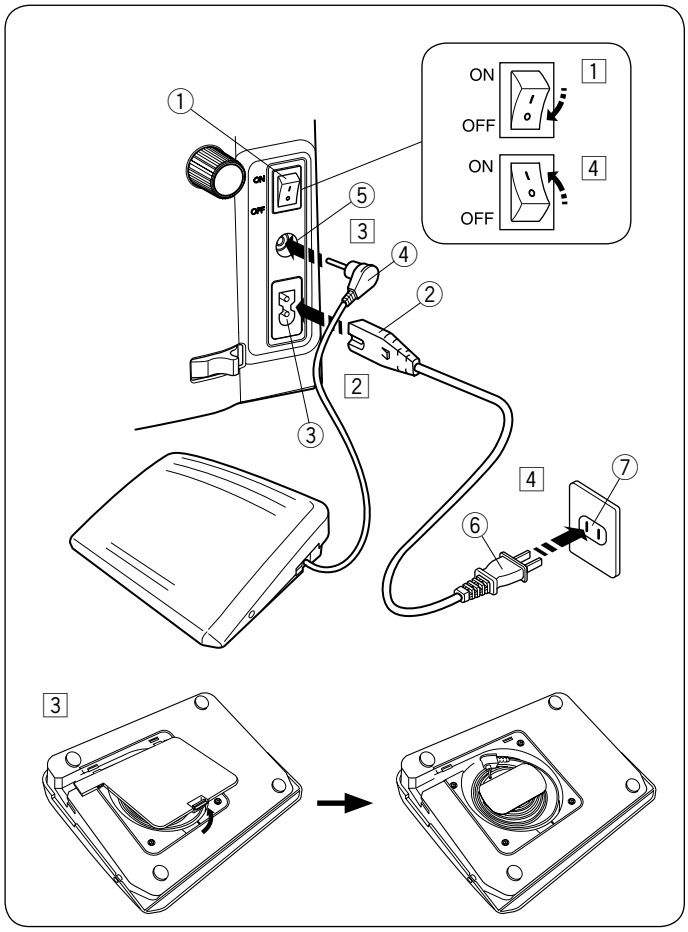

Using foot control

If you wish to use the foot control, pull out the cord from the foot control and insert the pin connector into the jack on the machine.

1 First make sure the power switch ① is OFF.
2 Insert the machine plug ② of the power supply cable into the machine socket ③.
3 Draw out the cord from the foot control and insert the pin connector ④ into the jack ⑤ on the machine.
4 Insert the power supply plug ⑥ into the wall outlet ⑦, and turn the power switch ① ON.

① Power switch
② Machine plug
③ Machine socket
④ Pin connector
⑤ Jack
⑥ Power supply plug
⑦ Wall outlet

NOTE:
The start/stop button does not work when the foot control is connected.

Operating Instructions:

Foot control model 21380 is for use with this sewing machine.

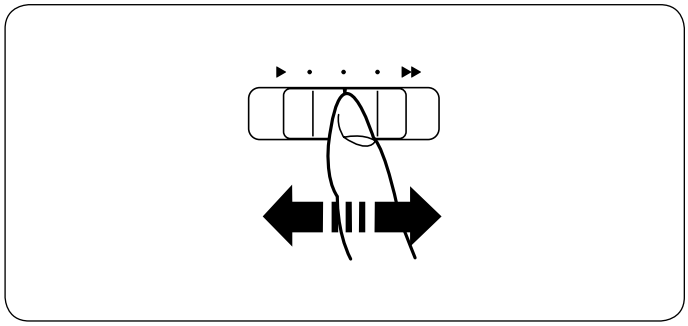

Controlling Sewing Speed

Speed control slider

You can limit the maximum sewing speed with the speed control slider according to your sewing needs.

To increase the sewing speed, move the slider to the right.

To decrease the sewing speed, move the slider to the left.

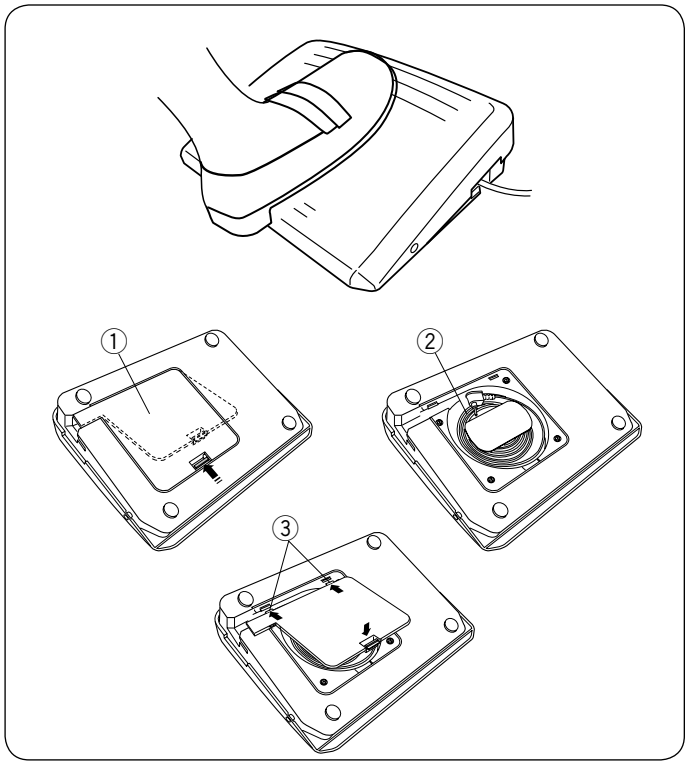

Foot Control

Pressing on the foot control can vary sewing speed. The harder you press the foot control, the faster the machine runs.

NOTE:
The machine runs at the maximum speed set by the speed control slider when the foot control is fully depressed.
This machine is equipped with an automatic shutdown safety feature to prevent overheating whenever the machine is running overloaded. Follow the safety instructions that appear on the visual touch screen.

Cord storage

The cord of the foot control can be conveniently stored in the cord storage under the base cover of the foot control.

① Base cover
② Cord
③ Hooks

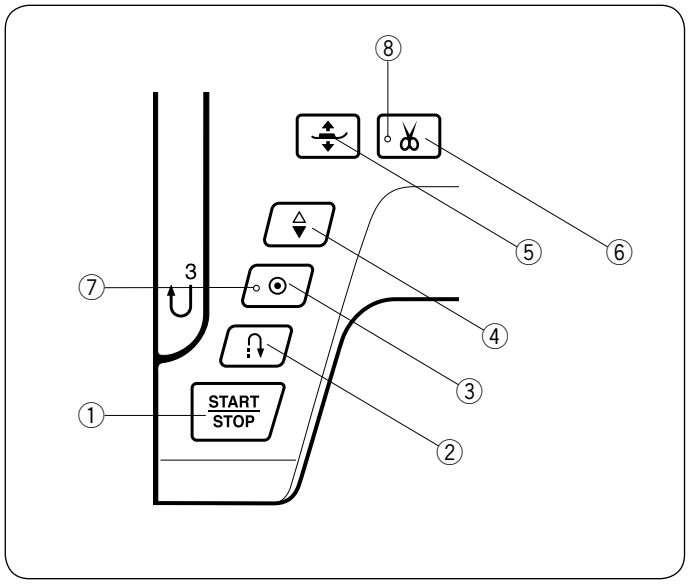

Machine Operating Buttons

① Start/stop button

Press this button to start or stop the machine.
The machine starts running slowly for the first few stitches, it then runs at the speed set by the speed control slider. The machine runs slowly as long as this button is pressed.

The button will turn red when the machine is running, and blue when it has been stopped.

Pressing and holding this button while sewing will slow down the sewing speed and the machine will stop when the button is released.

NOTE:
- The start/stop button cannot be used when the foot control is connected to the machine.
- You can select the desired start-up speed from slow, medium or high (refer to page 102).

② Reverse button

- **When stitch pattern U1, U4, U8-U10, Q1-Q3, or BR1-BR6, is selected;**

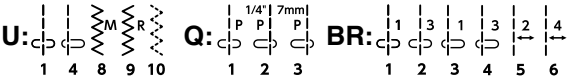

The machine will sew in reverse as long as the reverse button is pressed. Release the button to sew forward. When the machine is stopped and foot control is disconnected, the machine will sew in reverse slowly as long as the reverse button is pressed. Release the button to stop the machine.

- **When any other stitches are selected;**

If you press the reverse button when sewing any other patterns, the machine will immediately sew locking stitches and automatically stop.

NOTE:
There will be particular functions of the reverse button when stitch pattern U2, U3, B2, B13, or B14 is selected. Refer to pages 30, 46-47, 52 and 91 for instructions.

③ Auto-lock button

- **When stitch pattern U1, U4, U8-U10, Q1-Q3, or BR1-BR6, is selected;**

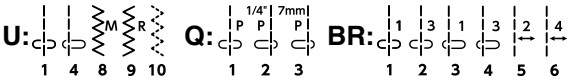

Press the auto-lock button to sew a locking stitch immediately. The machine will automatically stop.

When the machine is stopped, press the auto-lock button to blink the LED signal ⑦. The machine will immediately sew locking stitches and automatically stop when the machine is started.

- **When any other stitches are selected;**

Press the auto-lock button to sew a locking stitch at the end of current pattern. The machine will automatically stop.

When the machine is stopped, press the auto-lock button to blink the LED signal ⑦. The machine will sew a locking stitch at the end of the current pattern and automatically stop when the machine is started.

The machine will trim the threads automatically after locking the stitch when the auto thread cutting is turned on (refer to page 103).

④ Needle up/down button

Press this button to bring the needle bar up or down. The machine will stop with the needle in down position. However, you can change the needle stop position in the machine setting mode (refer to page 101).

⑤ Presser foot lifter button

The presser foot will go up or go down by pressing this button.
You can also use the presser foot lifter and knee lifter to raise and lower the presser foot (refer to page 23).

⑥ Thread cutter button

After finish sewing, press this button to trim the threads. The needle bar automatically rises after trimming the threads (refer to page 29).

The LED signal ⑧ blinks when the machine trims threads.

NOTE:
- The thread cutter button does not function:
  - directly after turning on the power.
  - when the presser foot is raised with the presser foot lifter.
  - after being pressed 3 times in a row.
- Use the thread cutter on the face cover if the thread is #30 or thicker (refer to page 29).

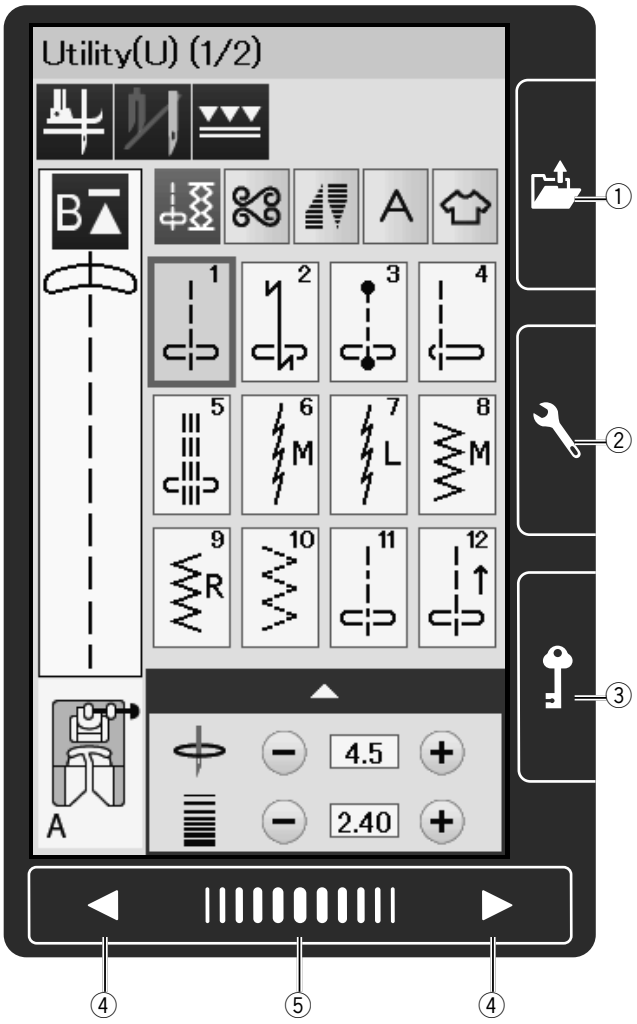

Touch Panel Keys

⚠ CAUTION:
Do not press the touch panel or visual touch screen with hard or sharp objects like pencils, screwdrivers or the like. Use the touch panel stylus included in the standard accessories.

① Open file key (refer to pages 62, 77)

Press this key and the open file window will open. You can open pattern combinations and monograms saved in the machine's internal memory or on a USB flash drive.

② Set mode key (refer to page 98)

Press this key to enter the setting mode. You can customize the machine settings to your preference. The machine settings for Common Settings, Ordinary Sewing and Choose Language are available in this mode.

③ Lockout key

Press this key to lockout the machine when threading the machine, replacing the accessories, etc.
To reduce the risk of injury, all the buttons except the lock key and presser foot lifter button are deactivated.
To unlock the machine, press this key again.

④ Page keys

Press the page key to display the next page or previous page. Press and hold the page key to turn the pages continuously.

⑤ Touch bar

Press on the bar and slide to the right or left to display the next page or previous page.

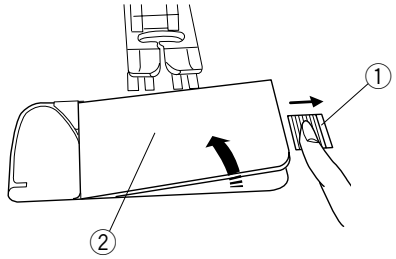

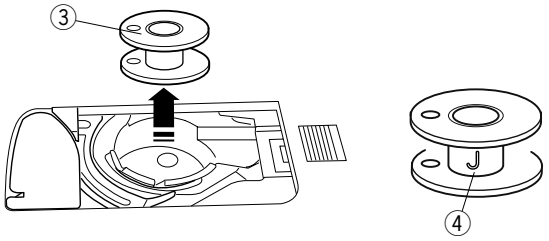

Winding the Bobbin

Removing the Bobbin

Slide the hook cover release button to the right, and remove the hook cover plate.

① Hook cover release button
② Hook cover plate

Lift out the bobbin from the bobbin holder.

③ Bobbin

NOTE:
Use “J” plastic bobbins ④ for the horizontal hook. Using other bobbins, such as pre-wound paper bobbins, may cause stitching problems and/ or damage to the bobbin holder.

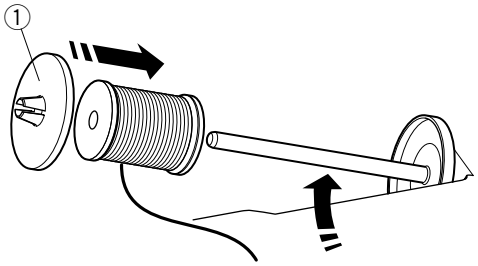

Setting the spool of thread

Lift up the spool pin. Place the spool of thread on the spool pin.
Attach the large spool holder, and press it firmly against the spool of thread.

① Large spool holder

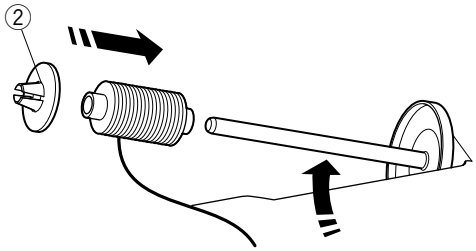

Use the small spool holder to hold narrow or small spools of thread.

② Small spool holder

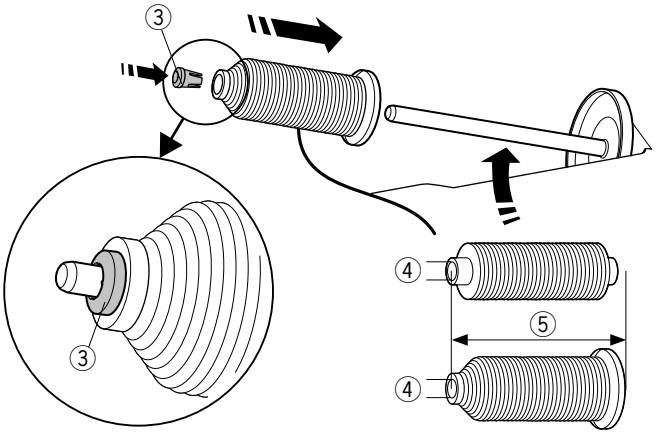

Use the spool holder (special) to hold the specific size of the spool of threads as shown.

The sizes of the spools of thread are as follows;
The hole diameter of the spool has a range of 9.5 mm to 10.5 mm (3/8″ to 7/16″), and the spool length has a range of 70 mm to 75 mm (2 3/4″ to 3″).

③ Spool holder (special)
④ Hole diameter (9.5 mm to 10.5 mm)
⑤ Spool length (70 mm to 75 mm)

Firmly insert the spool holder (special) into the hole and hold the spool as illustrated.

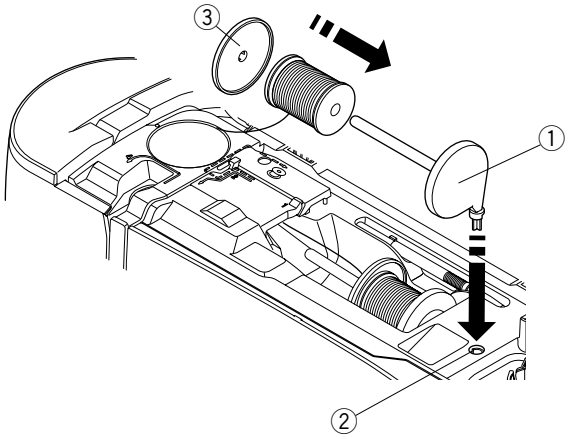

Extra spool pin

Use the extra spool pin when you need to wind a bobbin without unthreading the machine while working on a sewing project.
Insert the extra spool pin into the hole as shown.
Place a spool of thread on the extra spool pin and fix the spool with the spool holder.

① Extra spool pin
② Hole for extra spool pin
③ Large spool holder

NOTE:
The extra spool pin is also used for twin needle sewing.

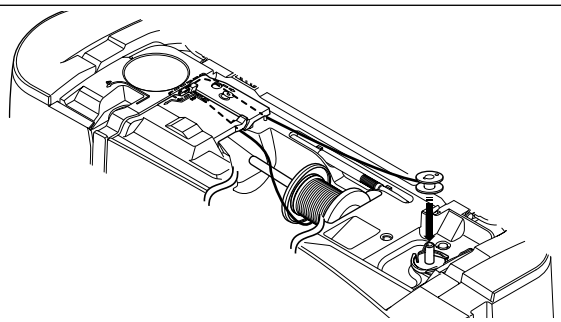

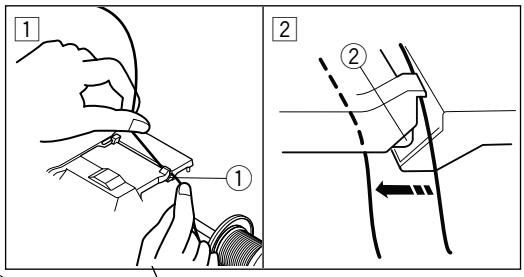

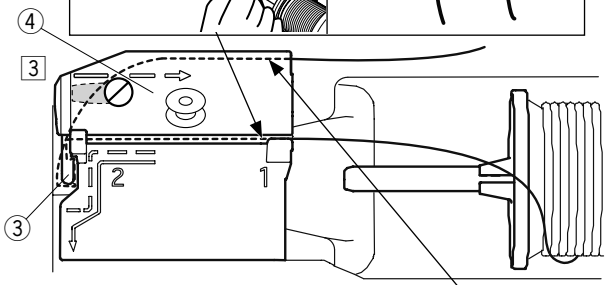

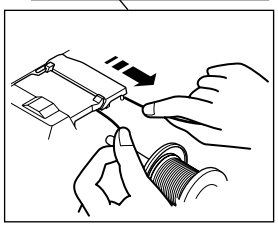

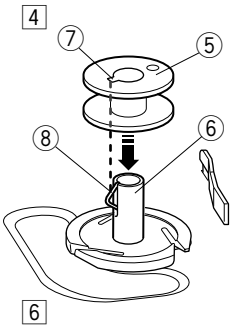

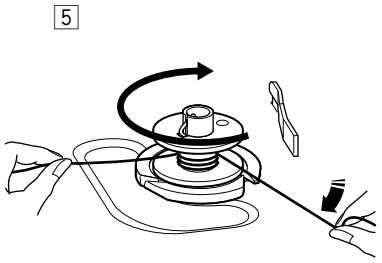

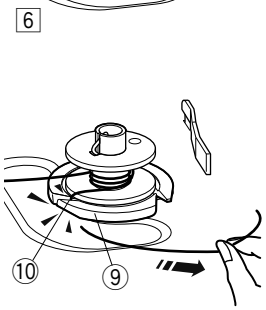

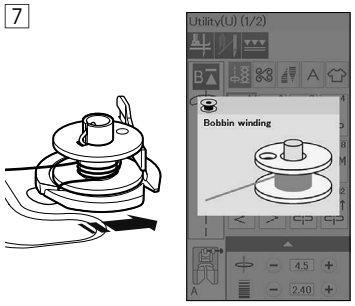

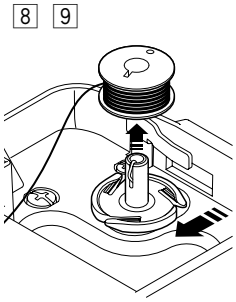

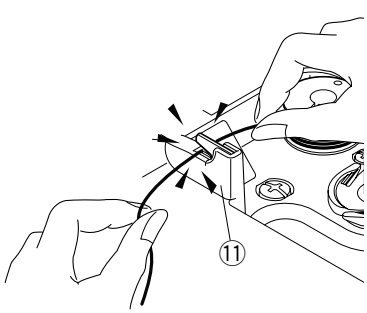

Winding the bobbin

NOTE:
Set the speed control slider at the fastest position (refer to page 9).

1 Pull the thread from the spool.

Hold the thread with both hands and pass the thread into the guide slot.

① Guide slot

2 Be sure that the thread is pulled down under the notch and into the space below the guide slot as shown.

② Notch

3 Draw the thread to the left and forward around the thread guide.

Draw the thread to the rear and to the right around and under the guide plate.

Firmly pull the thread to the right while holding it with both hands.

③ Thread guide
④ Guide plate

4 Put the bobbin on the bobbin winder spindle.

Be sure that the bobbin snaps into the place.

⑤ Bobbin
⑥ Bobbin winder spindle
⑦ Slit
⑧ Spring (projection)

5 Pass the thread to the bobbin.

Hold the thread with both hands and wind it around the bobbin clockwise several times.

6 Insert the thread into one of the slits of the flange plate and pull the thread to cut.

⑨ Flange plate
⑩ Slit

7 Push the bobbin to the right. The visual touch screen will show the bobbin winding sign.

8 Start the machine.

Stop the machine when the bobbin is fully wound and stops spinning.

Return the bobbin winder spindle to its original position.

9 Remove the bobbin. Cut the thread with bobbin thread cutter B.

⑪ Bobbin thread cutter B

NOTE:
For safety purposes, the machine will automatically stop 1.5 minutes after starting bobbin winding.

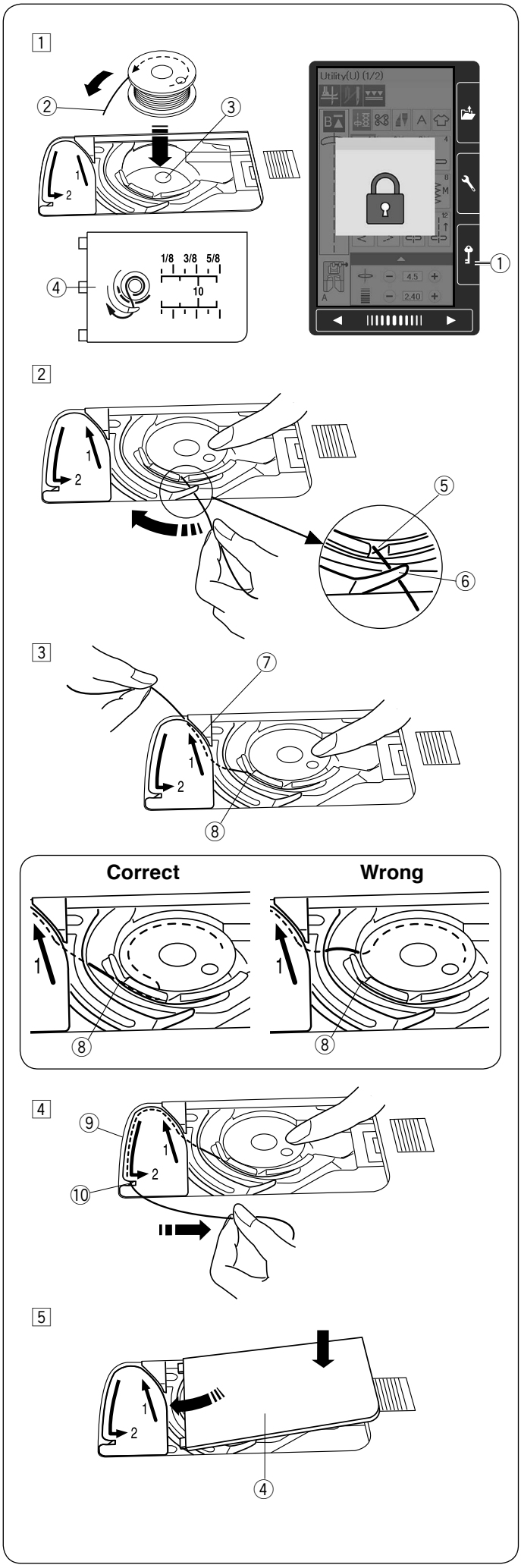

Inserting the bobbin

⚠ CAUTION:
Always make sure to press the lockout key to lockout the machine or turn the power switch OFF before inserting the bobbin.

1 Press the lockout key.

Place a bobbin in the bobbin holder with the thread running off counterclockwise as shown on the hook cover plate.

① Lockout key
② End of thread
③ Bobbin holder
④ Hook cover plate

2 Hold the bobbin with your fingertip so it does not rotate.

Guide the thread into the front notch of the bobbin holder.

Pull the thread to the left to pass it under the guide.

⑤ Front notch
⑥ Guide

3 Draw the thread to the left to pass it into the guide path marked “1”.

Make sure that the thread comes out from the side notch of the bobbin holder.

⑦ Guide path 1
⑧ Side notch

NOTE:
If the thread does not come out from the side notch, rethread from step 1.

4 Continue to draw the thread along the guide path marked “2” and pull the thread to the right through the slit. The thread will be cut to a proper length and held in place.

⑨ Guide path 2
⑩ Slit (thread cutter)

5 Set the left edge of the hook cover plate into opening.

Push down the hook cover plate to fit in place.

Press the lockout key to unlock the machine.

NOTE:
Unless otherwise noted, you can start sewing without drawing up the bobbin thread.
Refer to page 17 for how to draw up the bobbin thread.

Threading the Machine

⚠ CAUTION:
Always make sure to press the lockout key to lockout the machine before threading the machine.

Press the needle up/down button to raise the take-up lever to the highest position.

Press the lockout key to lockout the machine. The presser foot will go down and the upper thread tension disks will open.

① Lockout key

Pass the thread in order 1 to 7.

1 Hold the thread with both hands and pass the thread into the guide slot.

② Guide slot

NOTE:
Be sure that the thread is pulled down under the notch and into the space below the guide slot as shown.

③ Notch

2 Hold the thread with both hands and draw the thread around the corner of the guide.

Firmly pull the thread toward you along the right channel until the thread snaps.

④ Corner of the guide
⑤ Right channel

3 Draw the thread down along the right channel and around the bottom of the thread guide plate. Pull the thread up along the left channel.

⑤ Right channel
⑥ Thread guide plate
⑦ Left channel

4 While holding the thread at the spool, firmly draw the thread up and to the back of the take-up lever. Draw the thread forward to slip it into the eye of the take-up lever.

⑧ Eye of the take-up lever

5 Then pull the thread down along the left channel and through the lower thread guide.

⑨ Lower thread guide

6 Slide the thread from the right of the needle bar thread guide to the left.

Be sure to slide the thread to the end of the slit as shown.

⑩ Needle bar thread guide

7 Thread the needle with the needle threader (refer to the next page).

Built-in Needle Threader

NOTE:
- The needle threader can be used with a #11 to #16 needle.
  Thread size 50 to 90 is recommended.
  Do not use thread size 30 or thicker.
- The needle threader cannot be used with the twin needle.

⚠ CAUTION:
Always make sure to press the lockout key to lockout the machine before using the built-in needle threader.

1 Press the needle up/down button to raise the needle. Press the lockout key to lock the machine.

① Needle up/down button
② Lockout key

2 Pull the thread up to the left, over the needle threader guide while holding the thread near the spool with your hand.

③ Needle threader guide

NOTE:
Be sure that the thread pass the slit of the needle threader as shown.
④ Slit

3 Pull the thread up and slip it between the thread cutter and face cover from behind.

Pull the thread toward you to cut.

4 Pull down the needle threader lever as far as it will go.

5 Slowly release the needle threader lever to its original position to pass the thread through the needle eye.

Press the lockout key to unlock the machine.

NOTE:
If the thread loop is formed after releasing the needle threader lever, pull out the thread loop through the needle eye.

1

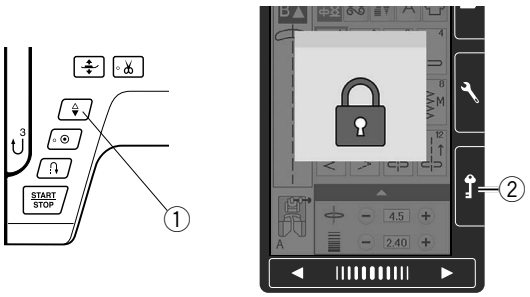

2

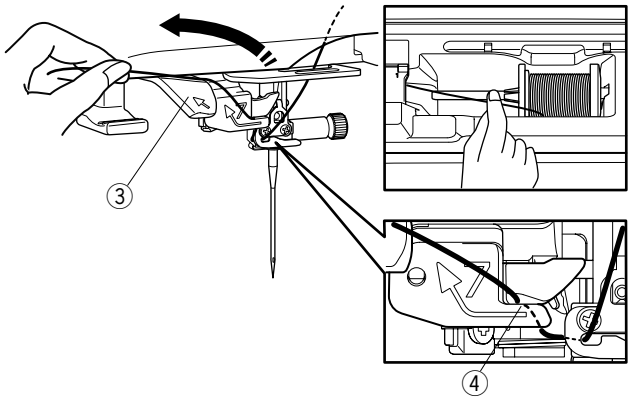

3

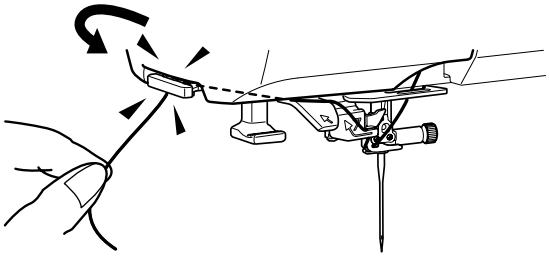

4

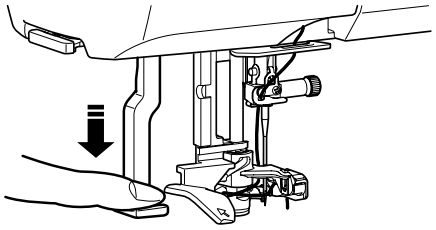

5

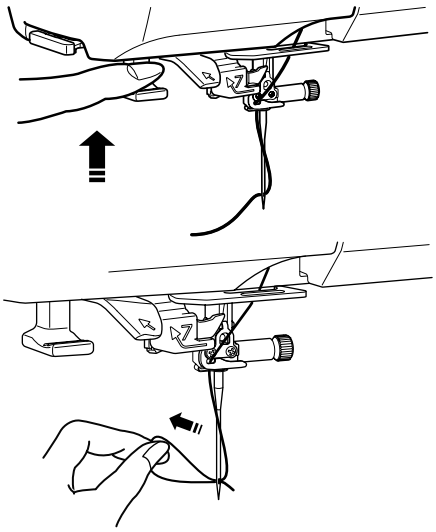

Drawing Up the Bobbin Thread

After using auto thread cutting or threading the bobbin holder, you can start sewing without drawing up the bobbin thread.

However, you need to draw up the bobbin thread when sewing gathering stitches, etc.

1

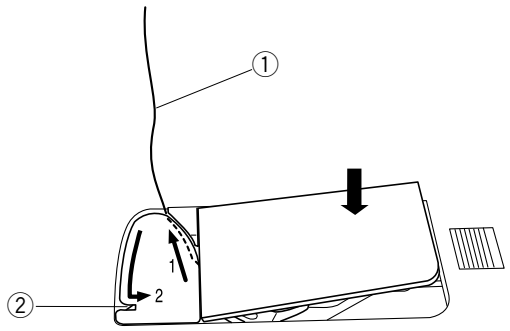

1 Remove the bobbin. Insert the bobbin into the bobbin holder again and rethread the bobbin holder according to the instructions on page 14, but leave a 10 cm (4″) tail of bobbin thread as shown.

① Bobbin thread

NOTE:
Do not cut the bobbin thread with the thread cutter.
② Thread cutter

2

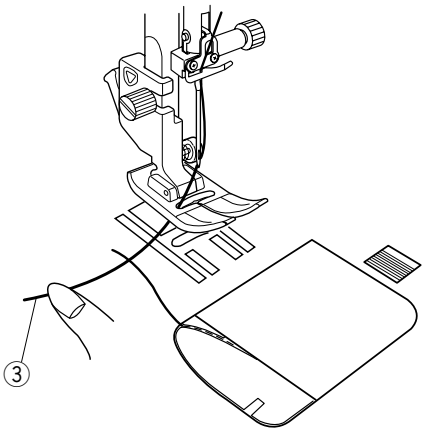

2 Raise the presser foot. Hold the needle thread lightly with your left hand.

③ Needle thread

3

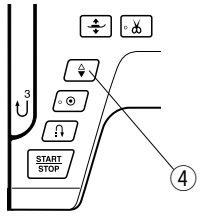

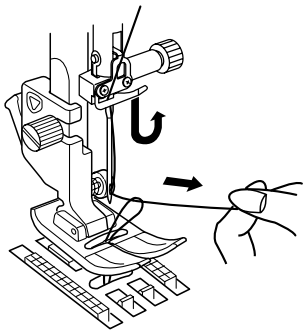

3 Press the needle up/down button twice to lower and raise the needle and pick up the bobbin thread.

④ Needle up/down button

4

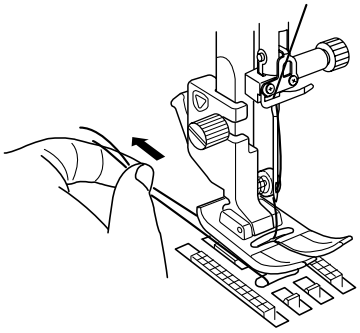

4 Pull both threads 10 cm (4″) under and behind the presser foot.

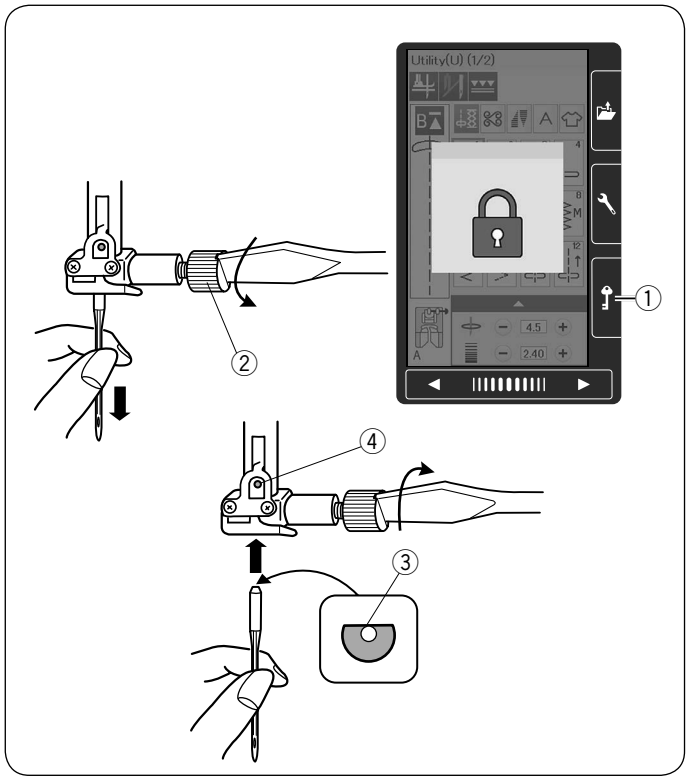

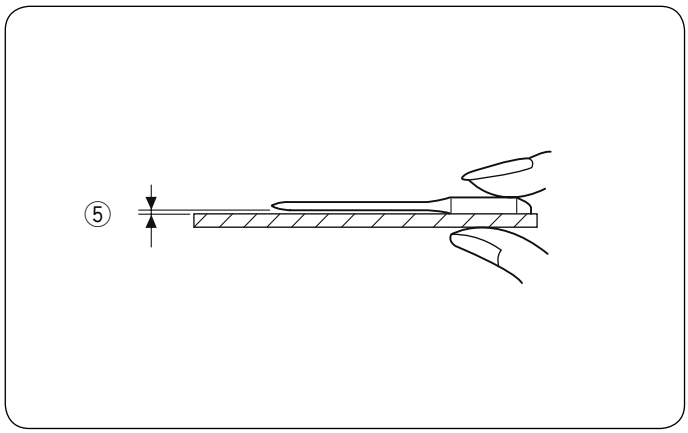

Replacing Needles

⚠ CAUTION:
Always make sure to press the lockout key to lockout the machine or turn the power switch OFF before replacing the needle.

Raise the needle by pressing the needle up/down button.
Press the lockout key.

① Lockout key

Loosen the needle clamp screw by turning it counterclockwise.
Remove the needle from the clamp.

② Needle clamp screw

Insert a new needle into the needle clamp with the flat side of the needle to the rear.

When inserting the needle into the needle clamp, push it up against the stopper pin and tighten the needle clamp screw firmly with a screwdriver.
Press the lockout key to unlock the machine.

③ Flat side
④ Stopper pin

To check needle straightness, place the flat side of the needle onto something flat (a needle plate, glass, etc.).

The gap between the needle and the flat surface should be consistent.

⑤ Gap

Never use a blunt needle.

⚠ CAUTION:
Be sure to tighten the needle clamp screw firmly with a screwdriver when attaching a needle to the machine, otherwise the needle may break or cause malfunction.

Fabric		Thread	Needle
Fine	Lawn Georgette Tricot Organza Crepe	Cotton #80-100 Synthetic #80-100	Blue tip needle Universal needle #9/65-11/75
Medium	Sheeting Jersey Broadcloth Fleece	Cotton #50-80 Synthetic #50-80	Red tip needle Purple tip needle Universal needle #11/75-14/90
Heavy weight	Denim Tweed Coating Quilting	Cotton #40-50 Synthetic #40-50	Red tip needle Purple tip needle Universal needle #14/90-16/100

NOTE:
1 x twin needle, 2 x blue tip needle (#11/75), 1 x red tip needle (#14/90) and 1 x purple tip needle (#14/90) are included in the needle case (Part No. 859856005).

Fabric and Needle Chart

- For general sewing, use red needle.
- Fine threads and needles should be used for sewing fine fabrics.
- In general, use the same thread for both needle and bobbin.
- Use a blue tip needle for sewing fine fabrics, stretch fabrics, tricot and buttonholes to prevent skipped stitches.
- Use a purple tip needle for sewing knits, free quilting and across the hem to prevent skipped stitches.
- Use a stabilizer or interface to stretch or fine fabrics to prevent seam puckering.
- Always test the thread and needle size on a small piece of the same fabric you will use for actual sewing.

Replacing the Presser Foot

⚠ CAUTION:

- Always make sure to press the lockout key to before replacing the presser foot.
- Use the proper foot for the selected pattern. The wrong foot can cause the needle to break.

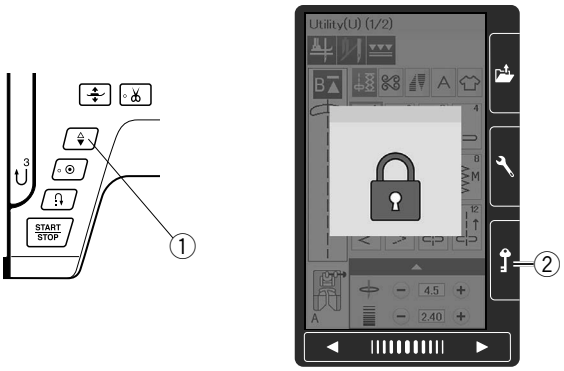

Removing the presser foot

Raise the needle by pressing the needle up/down button.
Press the lockout key.

① Needle up/down button
② Lockout key

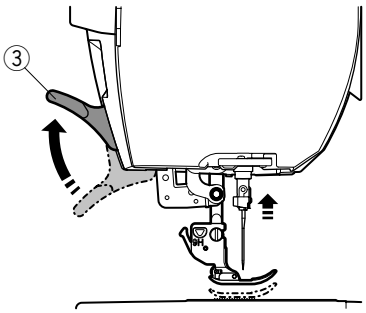

Raise the presser foot lifter.

③ Presser foot lifter

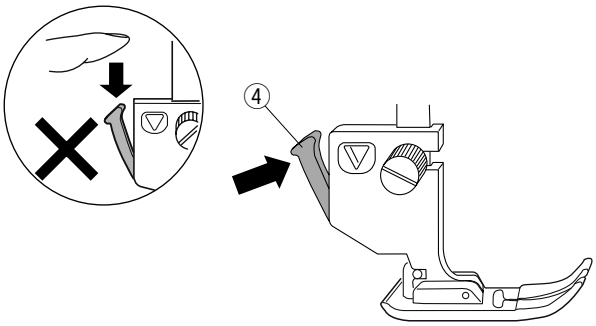

Press the black lever on the back of the foot holder.
The presser foot will drop off.

④ Lever

⚠ CAUTION:

To avoid damaging the lever, do not push it down.

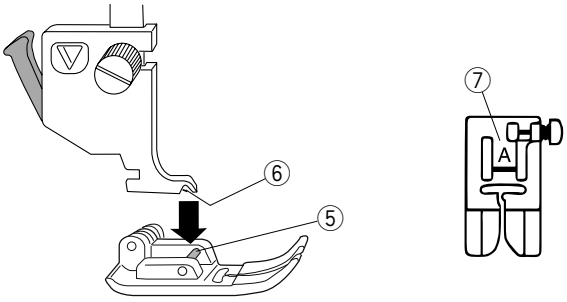

Attaching the presser foot

Place the presser foot so that the pin on the foot lies just under the groove of the foot holder.
Lower the presser foot lifter to lock the foot in place.
Each foot is marked with an identification letter.

Press the lockout key to unlock the machine.

⑤ Pin
⑥ Groove
⑦ Identification letter

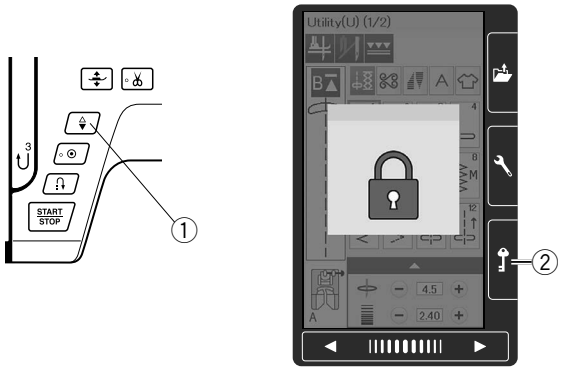

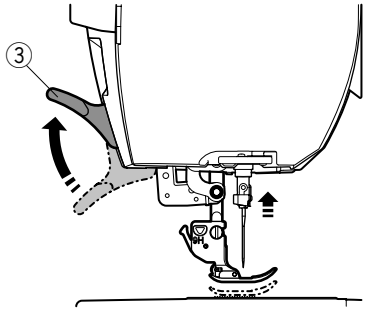

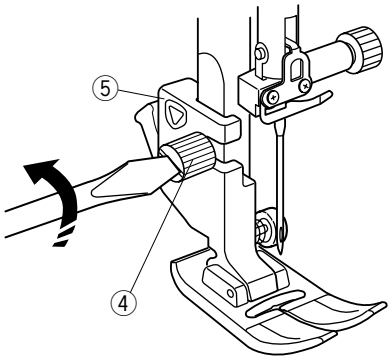

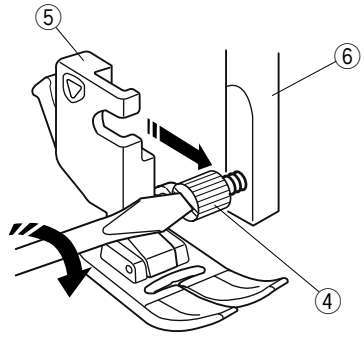

Removing and Attaching the Foot Holder

Remove the foot holder before using the dual feed foot or darning foot.

> **⚠ CAUTION:**
> Always make sure to press the lockout key to lockout the machine before replacing the foot holder.

Removing the foot holder

Raise the needle by pressing the needle up/down button. Press the lockout key and raise the presser foot with the presser foot lifter.

① Needle up/down button
② Lockout key
③ Presser foot lifter

Loosen the thumbscrew and remove the foot holder.

④ Thumbscrew
⑤ Foot holder

Attaching the foot holder

Attach the foot holder to the presser bar from the rear. Tighten the thumbscrew firmly with the screwdriver.

Press the lockout key to unlock the machine.

⑥ Presser bar

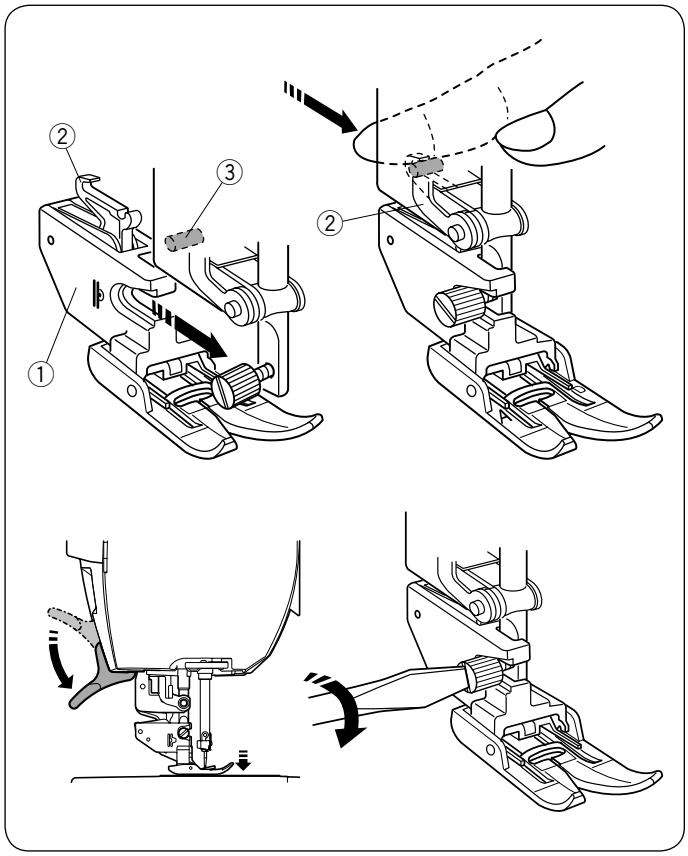

Attaching the Dual feed foot AD

Attach the dual feed holder to the presser bar.

① Dual feed holder

Tighten the thumbscrew with your fingers.
Push the dual feed link to engage it with upper feed drive.

② Dual feed link
③ Upper feed drive

Lower the presser foot lifter. Lower the needle to the lowest position by turning the handwheel.

Tighten the thumbscrew firmly with the screwdriver.

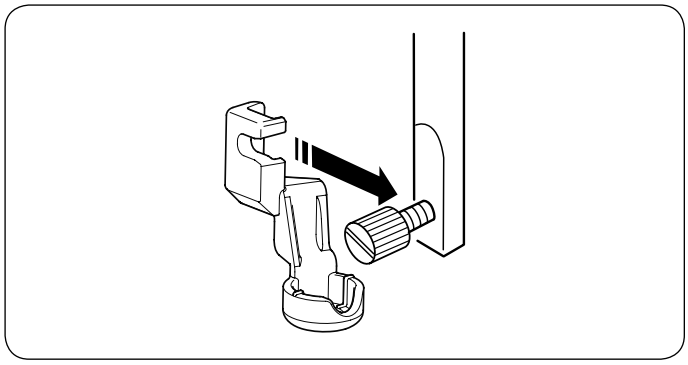

Attaching the Ruler work foot QR (Optional)

Attach the Ruler work foot QR to the presser bar from behind.
Tighten the thumbscrew firmly with the screwdriver.

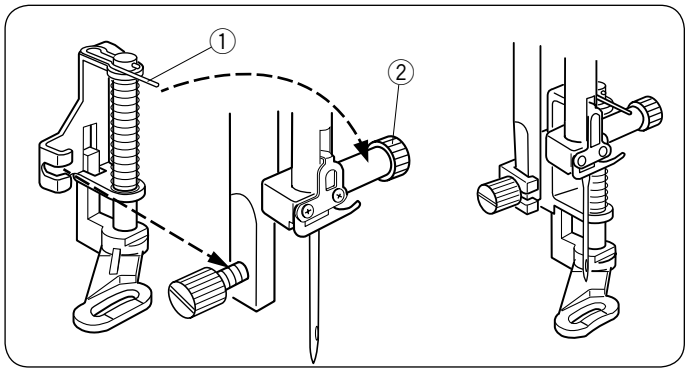

Attaching the Darning foot PD-H

Attach the darning foot PD-H to the presser bar by putting the pin on the needle clamp screw.

① Pin
② Needle clamp screw

Tighten the thumbscrew firmly with the screwdriver.

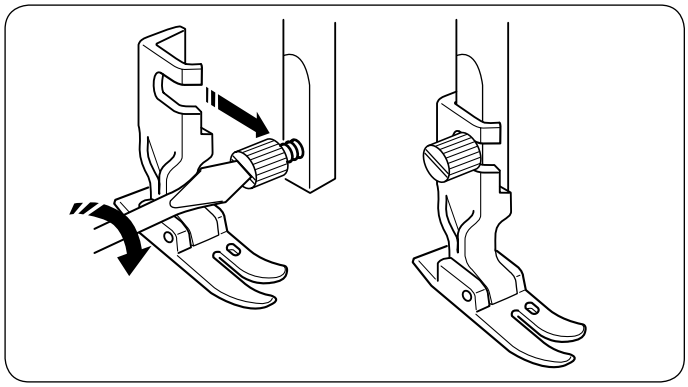

Attaching the Professional grade foot HP (Optional)

Attach the professional grade foot HP to the presser bar.
Tighten the thumbscrew firmly with the screwdriver.

Replacing the Needle Plate

Use the straight stitch needle plate when sewing with the dual feed foot.

⚠ CAUTION:
Always make sure to press the lockout key to lockout the machine before replacing the needle plate.

NOTE:
When the straight stitch needle plate is attached to the machine, the patterns not suitable for the straight stitch needle plate cannot be selected.

1

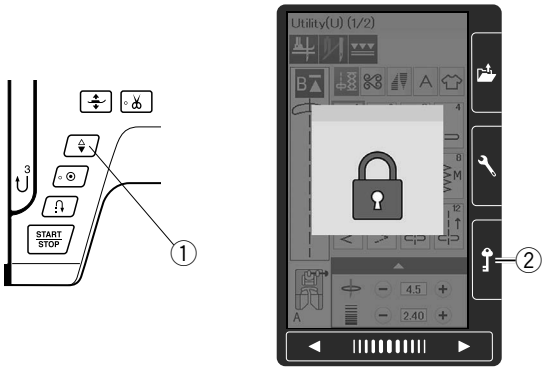

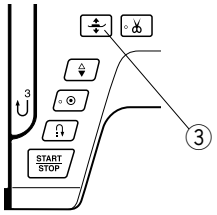

① Press the needle up/down button to raise the needle.

Press the lockout key.

Press the presser foot lifter button to raise the presser foot.

① Needle up/down button
② Lockout key
③ Presser foot lifter button

2

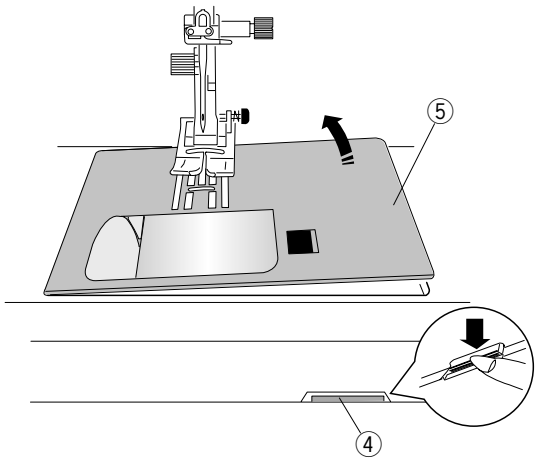

② Slide the extension table to the left to remove it.

Push down the needle plate release lever and the needle plate will snap off.

④ Needle plate release lever
⑤ Needle plate

3

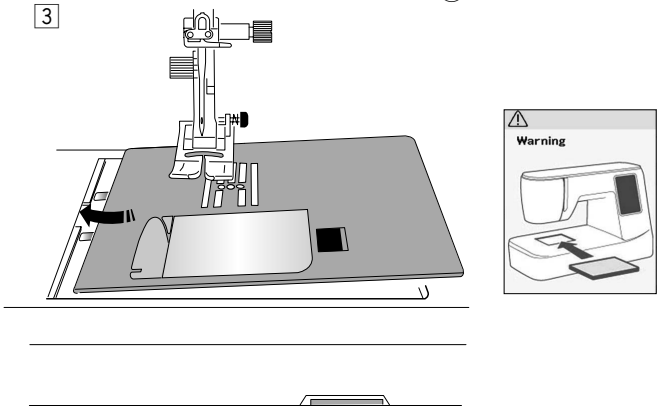

③ A message will appear warning that the needle plate is not secured.

Remove the needle plate to the right.

Place the straight stitch needle plate on the machine.

Set the left edge of the needle plate into the opening.

4

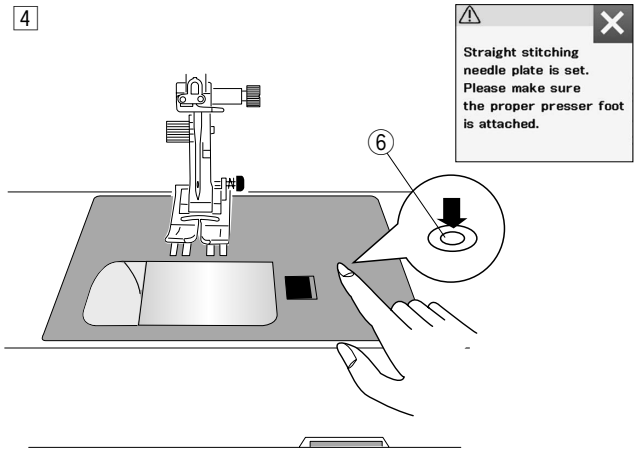

④ Push down on the mark of the needle plate until it locks in place.

Make sure the warning message disappears and the straight stitch is automatically selected.

Press the lockout key to unlock the machine.

Turn the handwheel slowly and make sure that the needle does not hit the needle plate.

⑥ Mark

⚠ CAUTION:
Never press the needle plate release lever while running the machine.

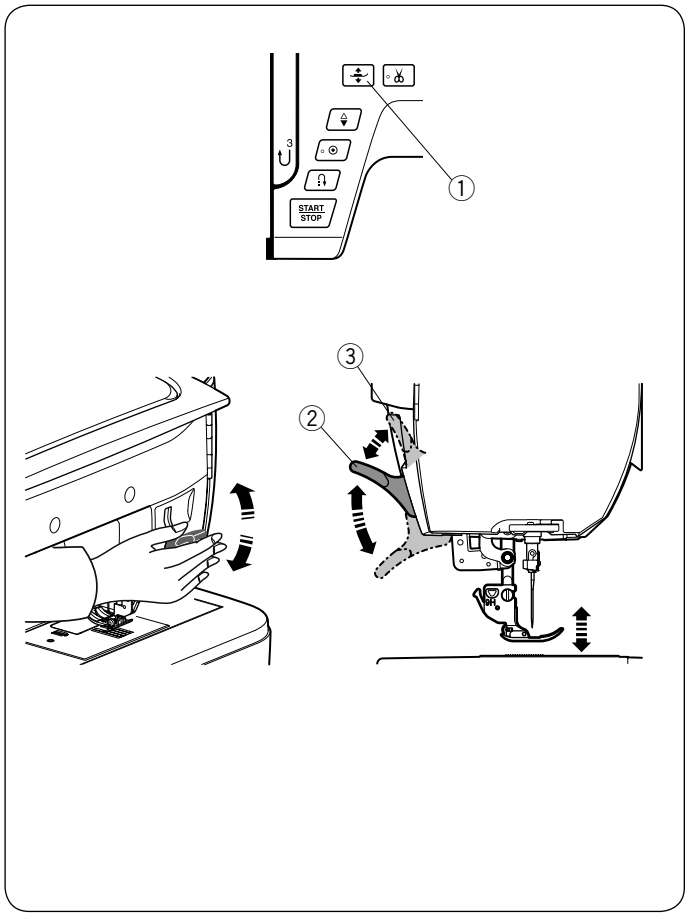

Raising and Lowering the Presser Foot

You can raise and lower the presser foot with the presser foot lifter button, the presser foot lifter or the knee lifter.

① Presser foot lifter button
② Presser foot lifter
③ Extra lifted position

You can raise the presser foot about 7 mm (1/4″) higher than the normal up position by exerting more pressure when lifting the presser foot lifter or knee lifter.
This allows for changing the needle plate, and also helps you to place layers of thick fabrics.

NOTE:
The presser foot cannot be lowered with the presser foot lifter if the foot was raised with the presser foot lifter button.

NOTE:
Do not turn the handwheel or press the up/down needle button when the presser foot is in the extra lifted position.

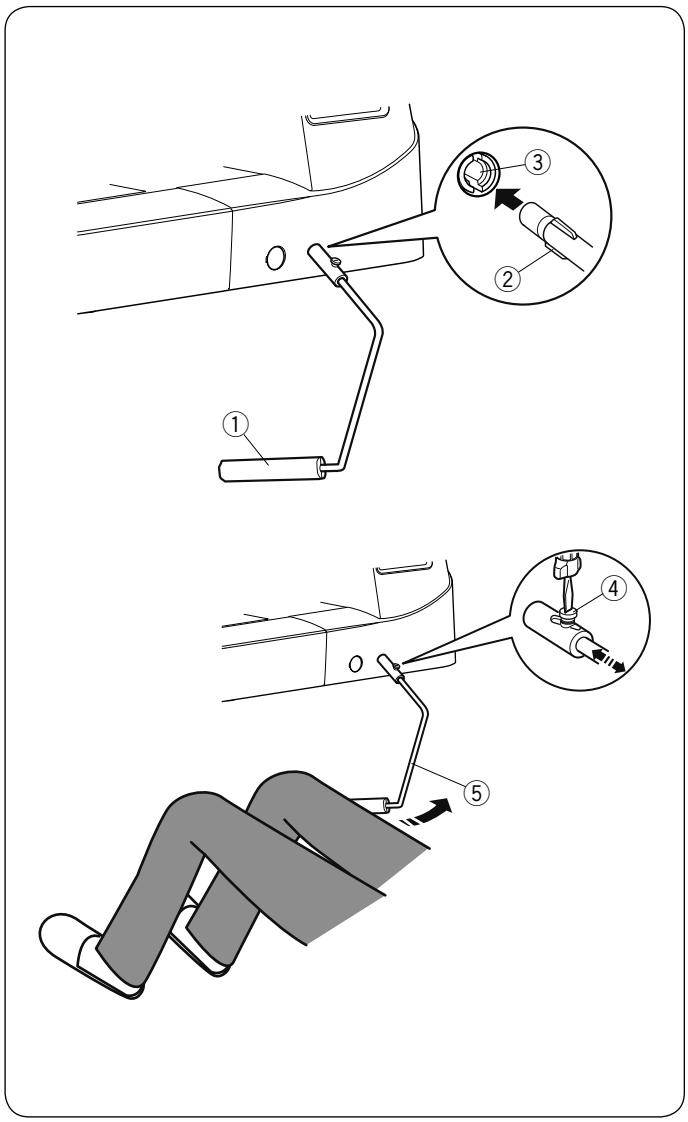

Knee Lifter

The knee lifter is extremely helpful when sewing patchwork, quilting, etc., since it allows you to handle the fabric while your knee controls the presser foot.

Attaching the knee lifter

Match the ribs on the knee lifter with the notches in the knee lifter socket and insert the knee lifter.

① Knee lifter
② Rib
③ Knee lifter socket

Adjusting the knee lifter

The angle of the knee lifter can be adjusted to fit you.
Loosen the setscrew and slide the angle bar in or out to adjust the angle of the knee lifter.
Tighten the setscrew to secure the angle bar.

④ Setscrew
⑤ Angle bar

Using the knee lifter

Push the knee lifter with your knee to easily move the presser foot up and down.
You can control how high the foot rises by the amount of knee pressure you exert.

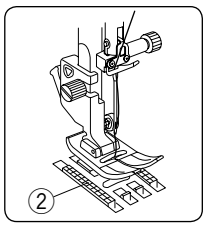

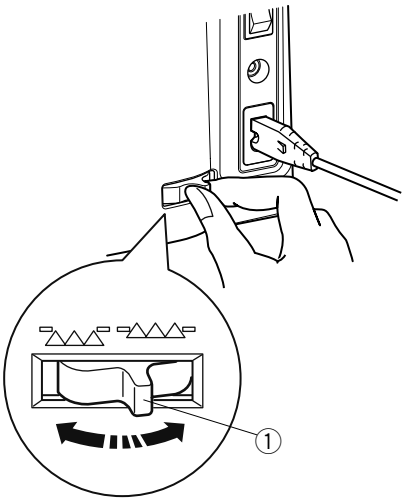

Dropping the Feed Dogs

The feed dogs can be lowered for sewing on buttons, free motion quilting, etc.

Shift the drop feed lever toward you to lower the feed dogs.

① Drop feed lever
② Feed dogs

Shift the drop feed lever away from you to raise the feed dogs, it will return to the up position when you start the machine.

NOTE:
If you start the machine with the feed dogs lowered, a message will appear on the visual touch screen.

ORDINARY SEWING MODE

Ordinary Stitch Patterns

In the ordinary sewing mode, there are 5 categories available.

① Utility stitches, Buttonhole and specialty stitches
② Decorative and quilting stitches
③ Tapering
④ Monogramming
⑤ Sewing applications

Press one of the icon keys to select the category.

NOTE:
In this manual, the pattern number refers to the initial for each group or category.
For example pattern #15 in the buttonholes and specialty stitches is referred to as pattern B15.

① Utility stitches, Buttonholes and speciality stitches

You can select utility stitches (U), buttonholes and speciality stitches (B) in this category.

② Decorative and quilting stitches

This category consists of the following 10 groups.

Applique stitches (A)
Heirloom stitches (H)
Quilting stitches (Q)
Satin stitches (S)
Bridge stitches (BR)
Decorative stitches (D)
Long stitches (L)
Pictograph stitches (P)
Play stitches (PL)
Created Stitches (CS)*

③ Tapering

You can taper the beginning and end of the decorative stitch patterns to create tapered corners and points.

* Created Stitches category appears when stitch patterns created with StitchComposer are imported to the machine.

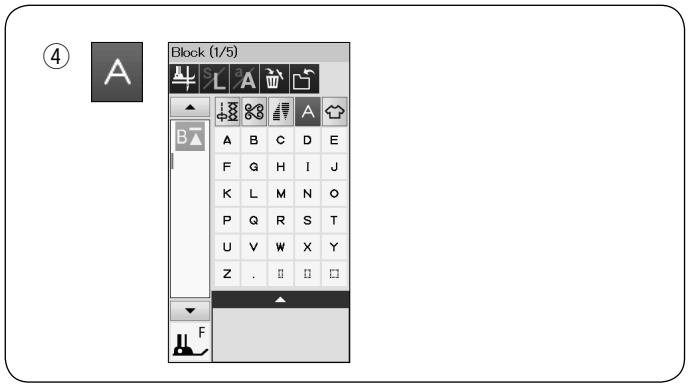

④ Monogramming

You can program lettering as well as a combination of characters.

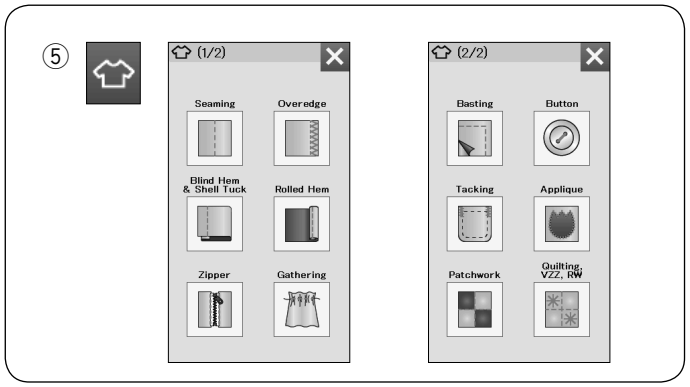

⑤ Sewing applications

You can select the appropriate stitch for a specific sewing project and fabric type from the designated application in this category.

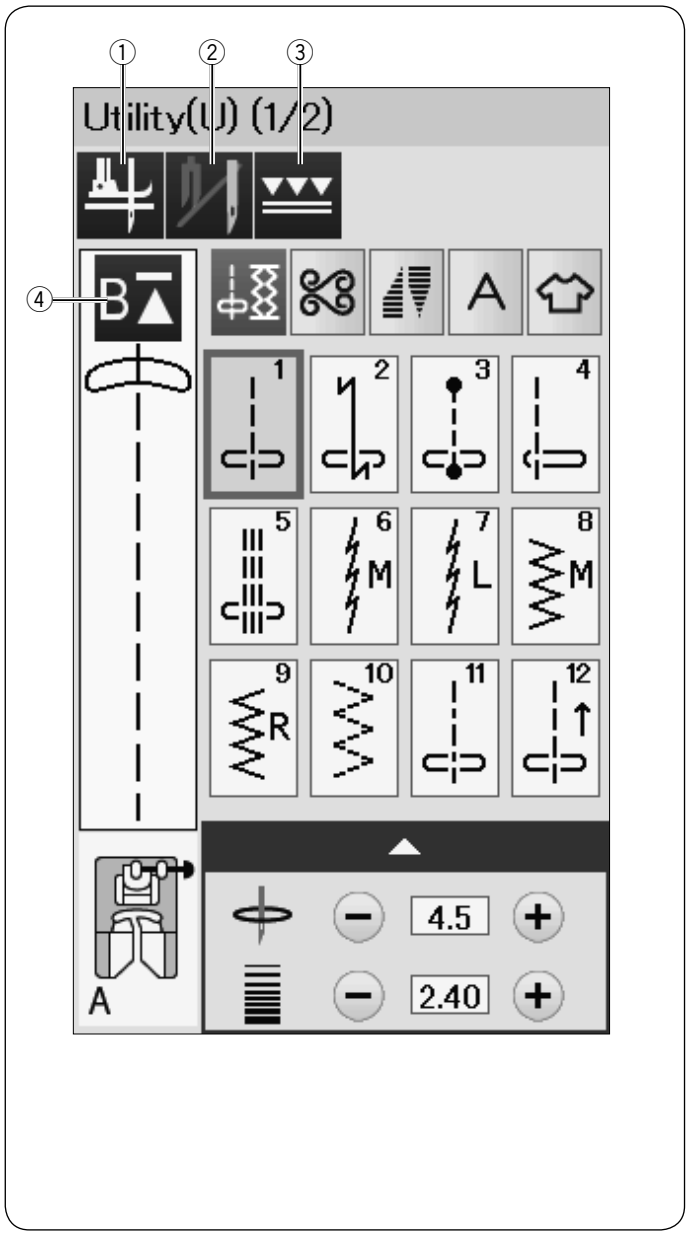

Function Keys in Ordinary Sewing Mode

① Foot-up key

If this option is turned on, the needle stops at the down position and the presser foot will automatically go up when the machine stops.
Press this key to turn this option on or off (refer to page 36).

② Twin needle key

Press this key to set the stitch width for twin needle sewing (refer to page 63).

③ Dual feed key

Press this key for dual feed sewing (refer to page 31).

④ Startover key

If you stop sewing in the middle of a stitch pattern and wish to sew the pattern again from the beginning, press this key before you start sewing.
Press this key once to startover from the beginning of the current pattern, or press this key twice to startover from the beginning of the first pattern of the combination (refer to page 66).

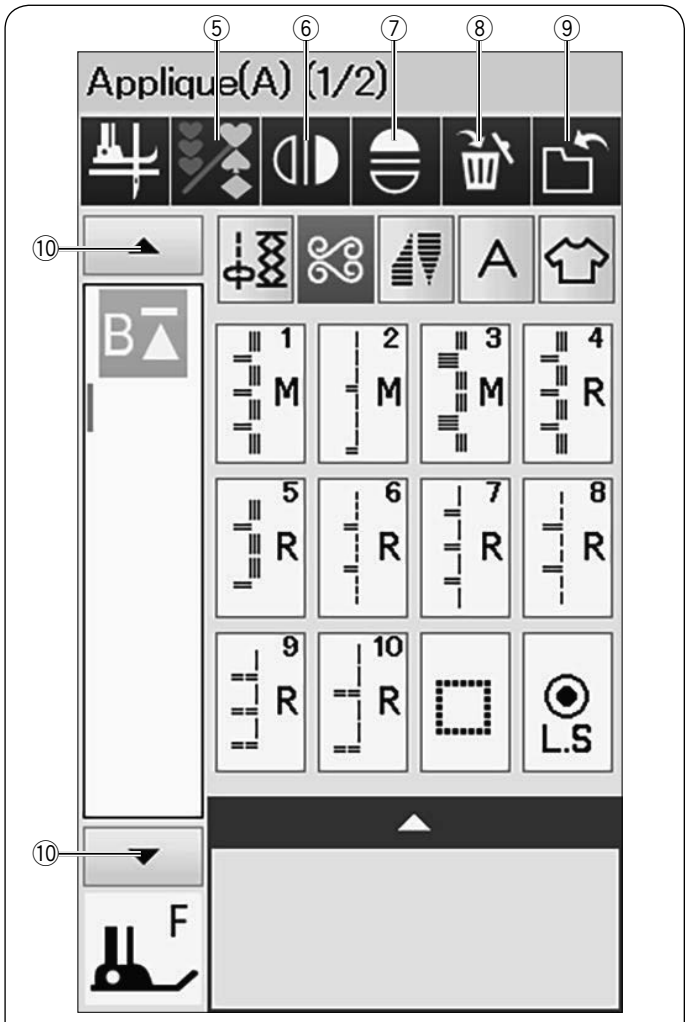

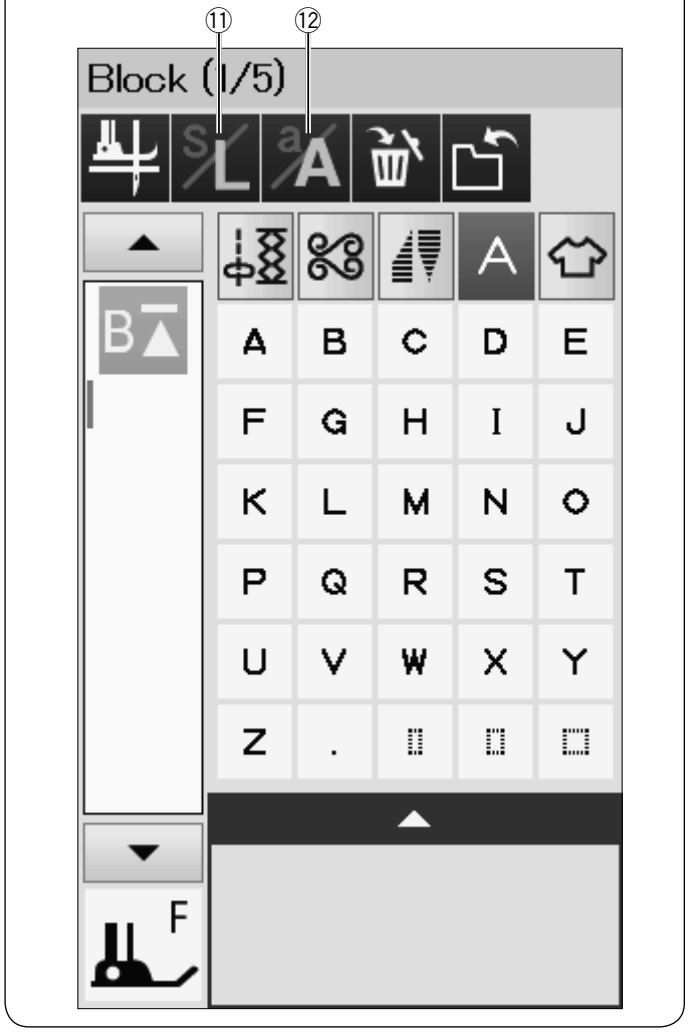

⑤ **Program key**

Press this key to program a pattern combination.

When this key is pressed, the delete key, mirror image keys, save file key and cursor keys will appear.

⑥ **Vertical mirror image key**

Press this key to sew a vertical mirror image of the selected pattern (refer to page 64).

⑦ **Horizontal mirror image key**

Press this key to sew a horizontal mirror image of the selected pattern. The key is grayed out if the selected pattern cannot be turned over (refer to page 64).

⑧ **Delete key**

Press this key to delete the pattern from the pattern combination.

⑨ **Save file key**

Press this key to save the pattern combination as a file.

⑩ **Cursor keys**

Press one of the cursor keys to move the cursor up or down.

⑪ **Letter size key**

Press this key to select the full size (L) or small size (S).

⑫ **Letter case key**

Press this key to select upper case or lower case for monograms.

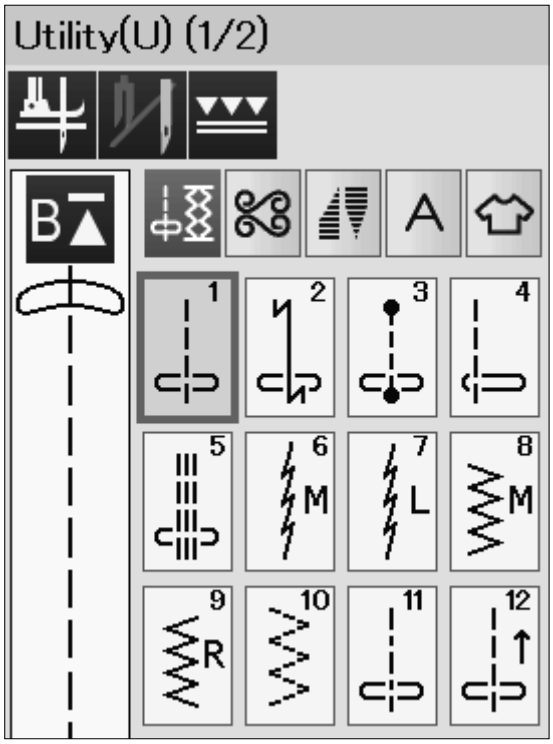

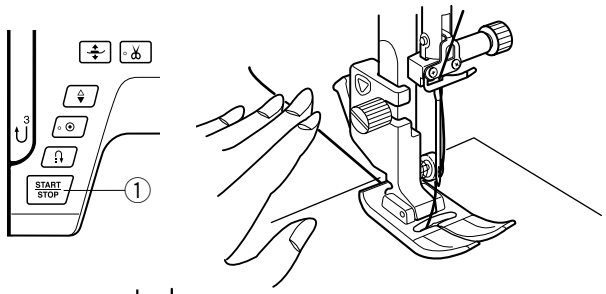

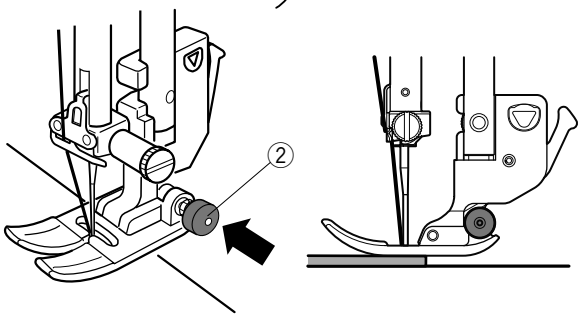

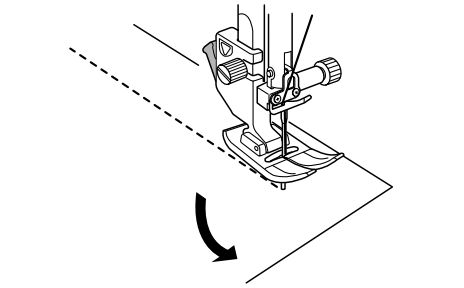

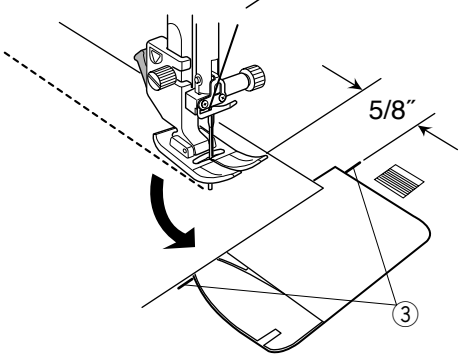

Utility Stitches

Straight Stitches

Patterns U1 to U5 are straight stitches for seaming. Press the pattern selection key for the desired stitch.

Starting to sew

Place the fabric next to the seam guide line on the needle plate. Lower the needle to the point where you want to start.

Pull the needle thread towards the rear and lower the foot.

> **NOTE:**
> Pull the needle thread to the left when using satin stitch foot F, open-toe satin stitch foot F2, dual feed foot or automatic buttonhole foot R.

Press the start/stop button or foot control to start sewing. Gently guide the fabric along the seam guide line letting the fabric go naturally.

① Start/stop button

Sewing from the Edge of Thick Fabric

The black button on the zigzag foot locks the foot in the horizontal position.
This is helpful when you start sewing at the extreme edge of thick fabrics or for sewing across a hem.

Lower the needle into the fabric at the point where you wish to start sewing.
Lower the foot while pushing in the black button. The foot is locked in the horizontal position to avoid slipping.
After a few stitches, the black button is released automatically.

② Black button

Changing Sewing Direction

Stop the machine and press the presser foot lifter button to raise the presser foot.
Pivot the fabric around the needle to change the sewing direction as desired.
Start sewing in a new direction.

> **NOTE:**
> If you turn on the foot up option, the presser foot will automatically go up when the machine stops (refer to page 36).

Turning a Square Corner

To maintain a 5/8″ seam allowance after turning a square corner, use the cornering guide on the needle plate.
Stop sewing when the front edge of fabric reaches the cornering guide lines.
Press the foot lifter button and turn the fabric 90 degrees.
Start sewing in the new direction.

③ Cornering guide

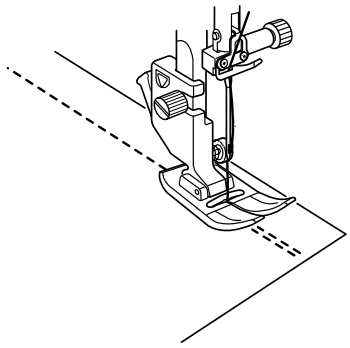

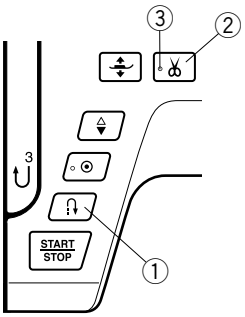

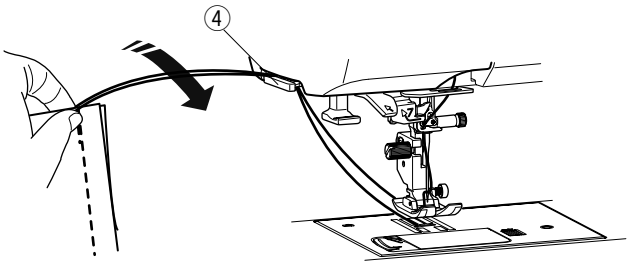

Securing Seams

For fastening the ends of seams, press the reverse button and sew several reverse stitches.
The machine sews in reverse as long as you press and hold the reverse button.

① Reverse button

Press the reverse button once when sewing the lock-a-matic stitch (pattern U2) or locking stitch (pattern U3) and the machine will lock the stitches off and stop automatically.

Cutting Threads

To cut the threads after finishing sewing, press the thread cutter button. The needle bar and presser foot will automatically go up after trimming the threads.

② Thread cutter button

NOTE:
The thread cutter button does not function when the presser foot is up or the LED signal ③ is turned off.
Use the thread cutter on the face cover to cut specialized or thick threads if the auto thread cutter does not work well.

③ LED signal

To use the thread cutter on the face cover, remove the fabric and draw it to the back.
Pull the threads up and slip them between the thread cutter and face cover from behind.
Pull the threads toward you to cut.

④ Thread cutter

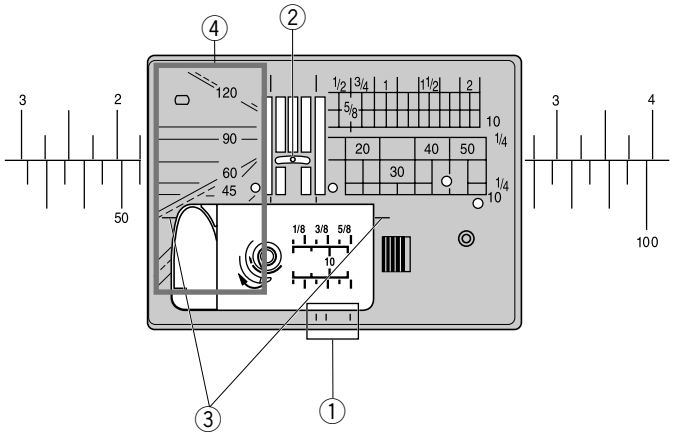

Needle Plate Guides

The seam guides are marked on the needle plate, free arm and hook cover.
The seam guides for 1/4″, 3/8″ and 5/8″ are also marked on the front of the needle plate.

① Seam guides on the front of the needle plate

The numbers on the needle plate indicate the distance from the center needle position in millimeters and inches.

② Center needle position

The cornering guides are very useful when turning a square corner.

③ Cornering guide

The angle scales on the needle plate are useful for patchwork piecing (refer to page 60).

④ Angle scales

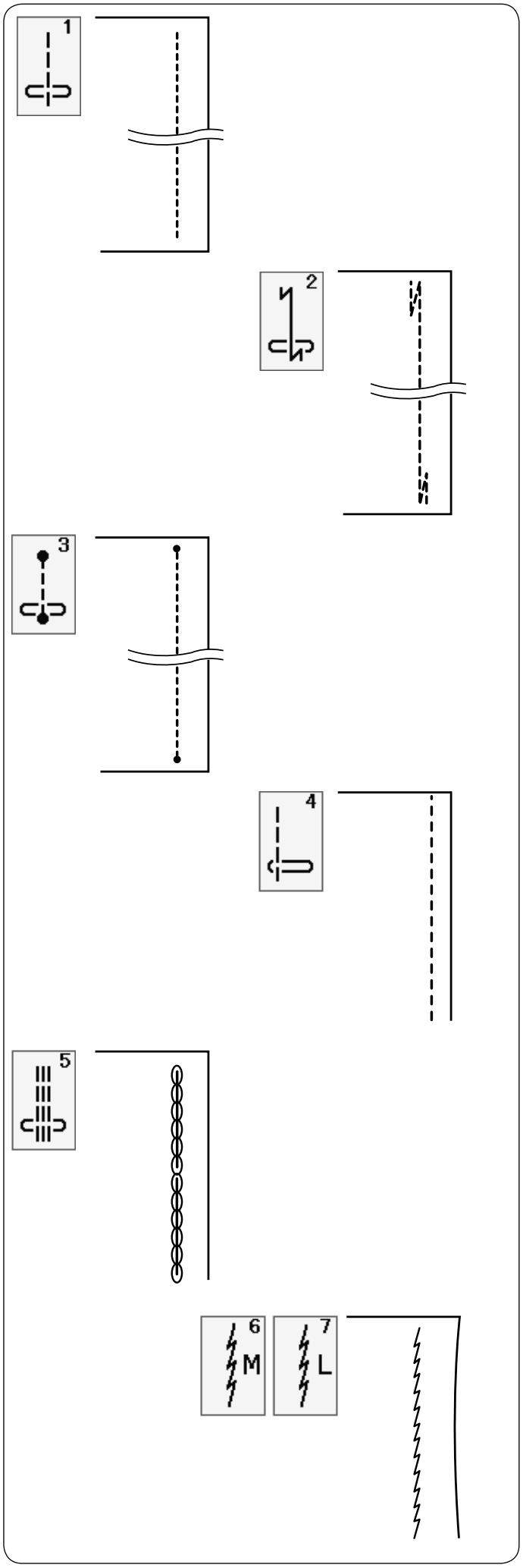

Variety of Straight Stitches

U1 Straight stitch in center needle position
Use this stitch for seaming, rolled hemming, etc.

U2 Lock-a-matic stitch
Use this stitch to secure the beginning and the end of a seam with backstitching.
When you reach the end of the seam, press the reverse button once.
The machine will sew four reverse stitches, four forward stitches, and then stop sewing automatically.

U3 Locking stitch
This unique stitch is used where an invisible locking stitch is needed.
The machine will sew several locking stitches at the beginning and continue sewing forward.
When you press the reverse button at the end of the seam, the machine will sew several locking stitches in place, then stop sewing automatically.

U4 Straight stitch in left needle position
Use this stitch to seam fabrics close to the edge.

U5 Triple stretch stitch
This strong, durable stitch is recommended for areas where both elasticity and strength are needed to ensure comfort and durability.
Use it to reinforce areas such as crotch and armhole seams.
Also use it when constructing items such as backpacks for extra strength.

U6, U7 Stretch stitches
These are narrow stretch stitches designed to eliminate puckering on knit fabrics and bias seams, while permitting the seam to be pressed completely open flat.
Use U7 for seaming fine fabrics or stretch fabrics.

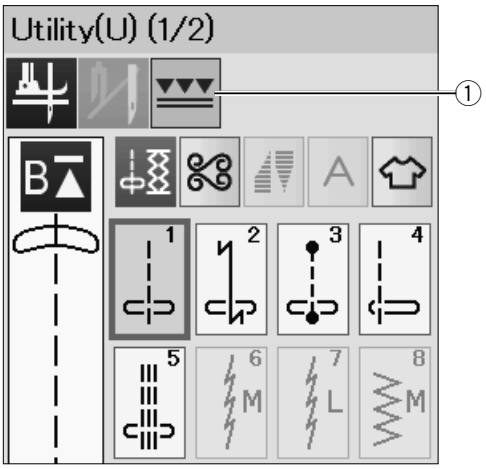

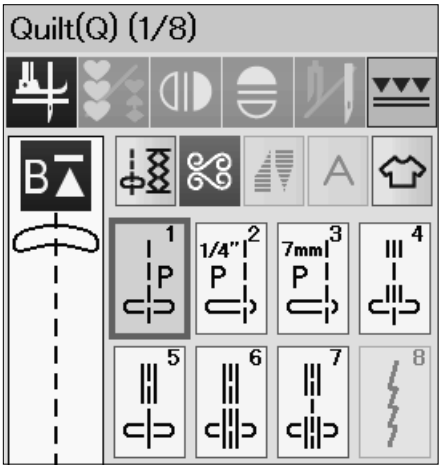

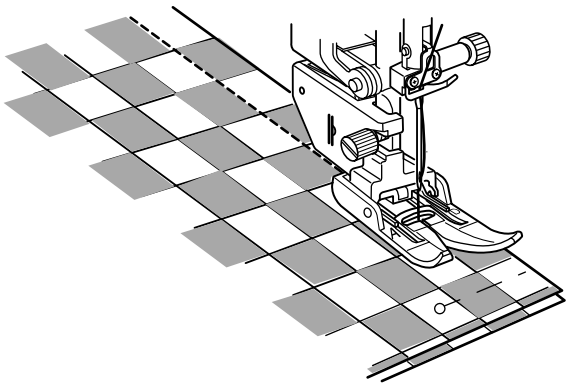

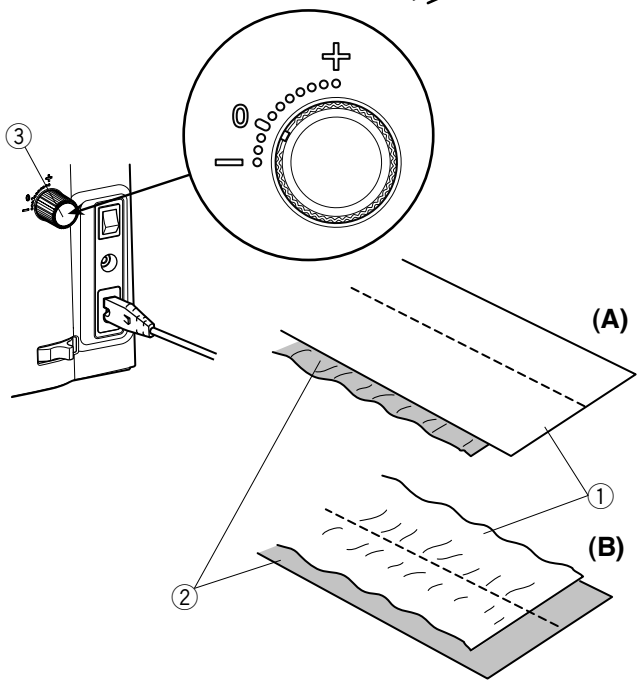

Sewing with the Dual Feed Device

Patterns U1 to U5 and Q1 to Q7 can be sewn with the dual feed device.

The dual feed device is extremely effective when sewing hard to feed materials such as PVC coated fabric or leather.

It also eliminates layer slippage.

See page 21 for how to attach the dual feed foot and to engage the dual feed device.

Press the dual feed key ① and select the desired pattern.

NOTE:
The patterns not suitable for dual feed sewing are grayed out.
The dual feed key will gray out or not be indicated if you selected a pattern not suitable for dual feed sewing.

NOTE:

Dual feed quilt piecing foot OD appears on the visual touch screen when patterns Q2 or Q3 is selected.
Dual feed quilt piecing foot OD (twin) is an optional item.

Place the fabric under the foot and lower the needle at the point where you wish to start.
Start sewing at medium speed.

When seaming plaid fabrics, match the plaids of the upper and lower layers and pin them together.
Remove the pins as you sew.

Dual feed balancing dial

The dual feed balancing dial should be set at “0”, however you may need to adjust the dual feed balance depending on the type of fabric.

Check the feed balance by test sewing on a scrap piece of the fabric you intend to use.

(A): If the lower layer puckers, turn the dual feed balancing dial toward “+”.

(B): If the upper layer puckers, turn the dual feed balancing dial toward “–”.

① Upper layer
② Lower layer
③ Dual feed balancing dial

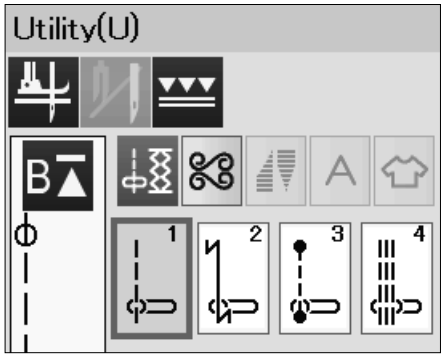

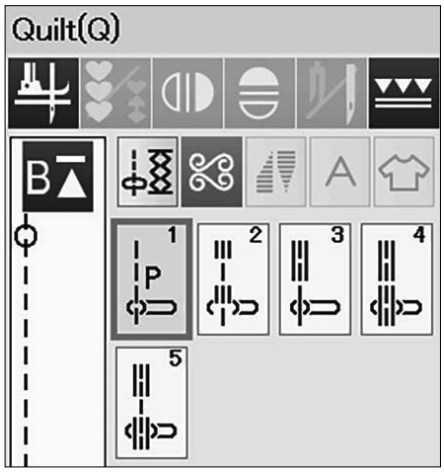

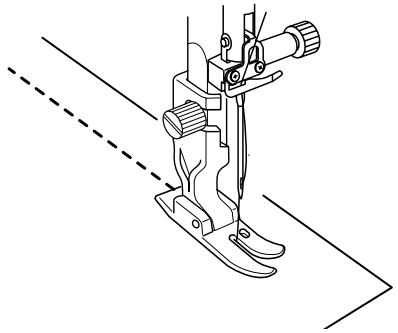

Sewing with the Professional grade foot HP (Optional)

Patterns U1 to U4 and Q1 to Q5 can be sewn with the professional grade foot HP.

Use the professional grade foot HP for the straight stitch with a professional result.

See page 21 for how to attach the professional grade foot HP.

Replace the needle plate with the professional grade needle plate HP (optional) when using professional grade foot HP. See page 22 for how to attach the professional grade needle plate HP (optional).

Attach the professional grade needle plate HP (optional) and professional grade foot HP and select the desired pattern.

NOTE:
The patterns not suitable for the professional grade needle plate HP (optional) will not be displayed.

Place the fabric under the foot and lower the needle at the point where you wish to start and sew.

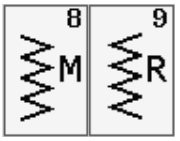

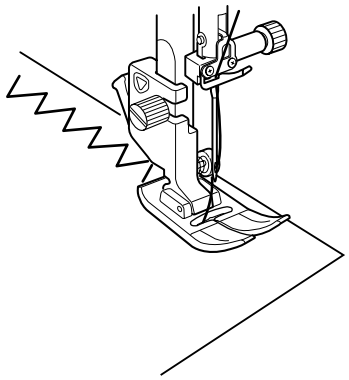

Zigzag Stitches

U8, U9 Zigzag stitches
Zigzag stitches are used for various sewing needs including overcasting. These stitches can be used on most woven fabrics.
A dense zigzag stitch can also be used for applique.

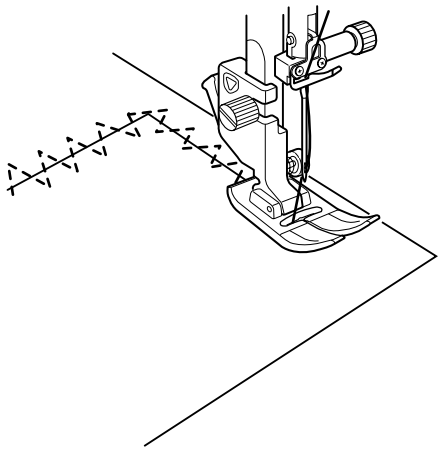

U10 Multiple zigzag stitches
These stitches are used for mending tears.

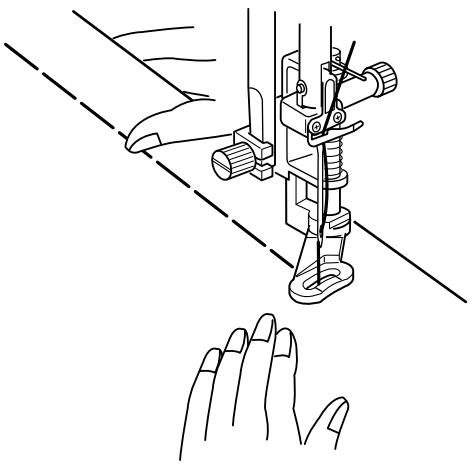

U11 Basting
See page 89 for sewing instructions.

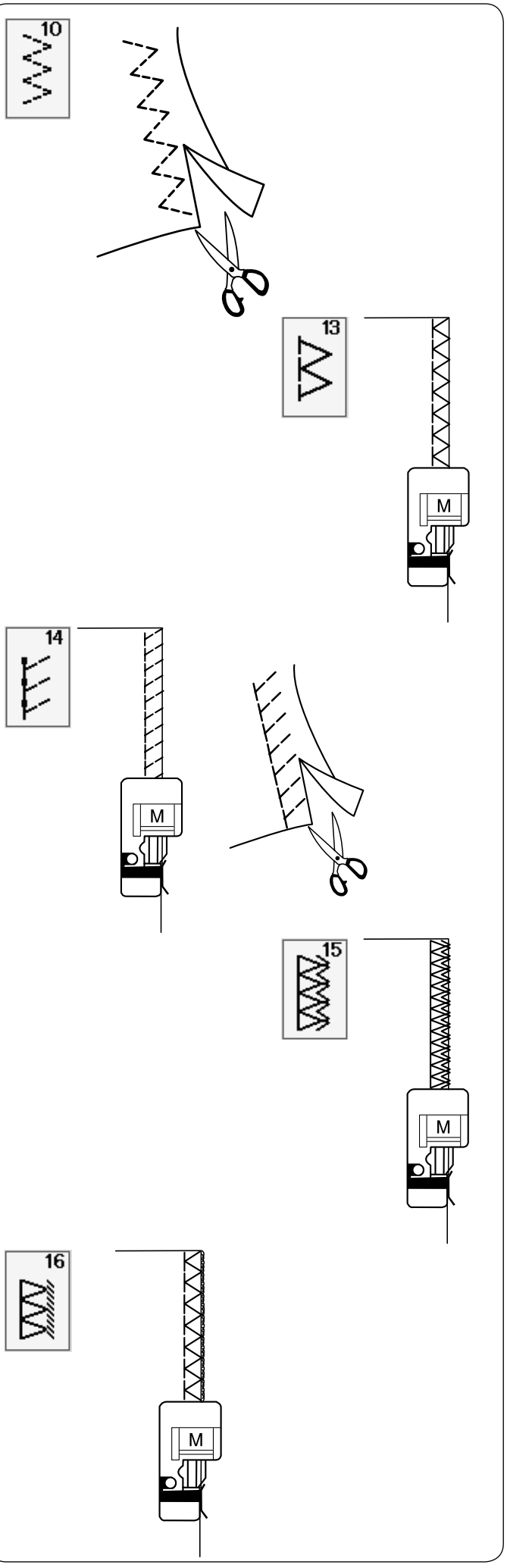

Variety of Overcasting Stitches

U10 Multiple zigzag stitch
This stitch is used to finish a raw edge of synthetics and other stretch fabrics that tend to pucker.
Sew along the fabric edge leaving an adequate seam allowance. After sewing, trim off the seam allowance closer to the stitches.

U13 Overcasting stitch
This stitch can be used to simultaneously seam and overcast edges of fabrics.
Use this stitch when you do not need to open seams flat.
Place the fabric edge next to the guide of the foot and sew.

U14 Knit stitch
This stitch is recommended for sewing such fabrics as synthetic knits and stretch velour as it provides the greatest amount of elasticity and strength.
Place the fabric edge next to the guide of the foot and sew.
For better results, use the zigzag foot A and sew leaving an adequate seam allowance.
After sewing, trim the seam allowance close to the stitches.

U15 Double overedge stitch
This stitch is excellent for fabrics that tend to fray extensively such as linens and gabardines.
Place the fabric edge next to the guide of the foot and sew.
Two rows of zigzag stitches are simultaneously sewn over the edge to insure that the fabric will not ravel.

U16 Overlock stitch
This stitch finishes the edges of fabric in a way similar to a commercial overlocking machine for a professional look.
Place the fabric edge next to the guide of the foot and sew.

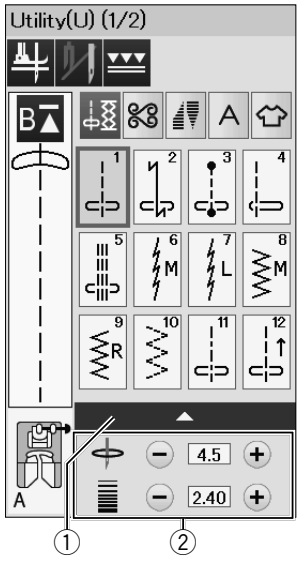

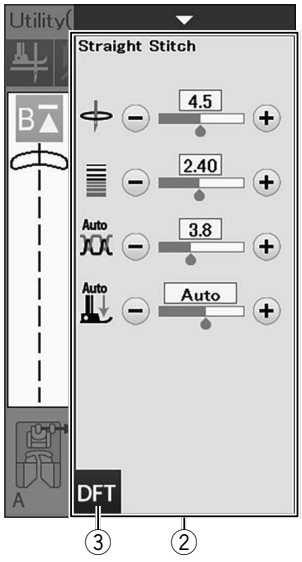

Manual Stitch Settings

You can alter the stitch width (or needle drop position of the straight stitches) and stitch length.
Press the “+” or “–” key beside the setting you wish to change. Press default key to recover the original stitch setting.

When you press the setting bar, the manual setting window expands to show more options.
You can alter other settings such as needle thread tension and presser foot pressure value, depending on the selected stitch pattern.
Press the setting bar again to shrink the manual setting window.

① Setting bar
② Manual setting window
③ Default key

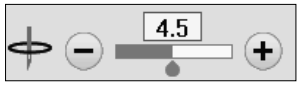

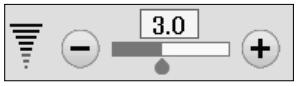

Altering needle drop position (straight stitches)
Press the “+” key to move the needle drop position to the right.
Press the “–” key to move the needle drop position to the left.

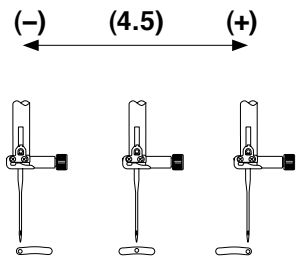

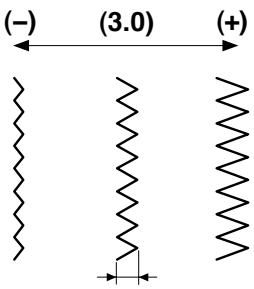

Altering stitch width
Press the “+” key to increase the stitch width.
Press the “–” key to decrease the stitch width.

> **NOTE:**
> The adjustable range of patterns U6-U10 is 0.0 to 7.0.

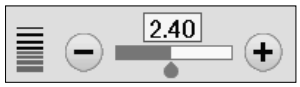

Altering stitch length
Press the “+” key to increase the stitch length.
Press the “–” key to decrease the stitch length.

> **NOTE:**
> The adjustable range of patterns U6 is 0.0 to 5.0, U7 is 1.0 to 5.0, U8-U10 is 0.0 to 5.0.

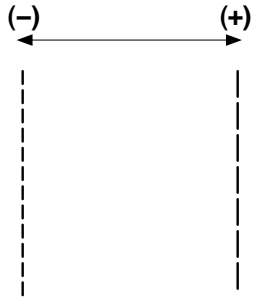

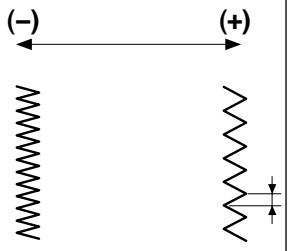

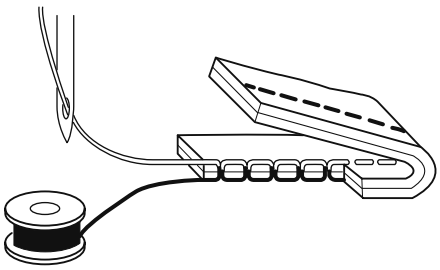

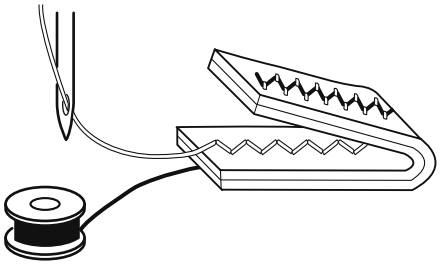

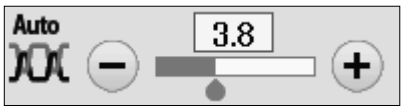

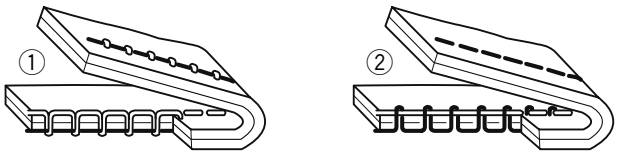

Adjusting Thread Tension

This machine is equipped with automatic thread tension control, which optimizes the tension balance for the selected stitch pattern.

Balanced thread tension

Straight stitch: Both needle and bobbin threads interlock between the layers.

Zigzag stitch: The needle thread appears slightly on the wrong side of the fabric.

However you may need to manually adjust the tension balance depending on the sewing conditions, or you can fine-tune the thread tension to suit your preference.

① Press the “+” key if the tension is too loose.
② Press the “–” key if the tension is too tight.

Adjusting Foot Pressure Control

The presser foot pressure is automatically optimized for each stitch pattern.
However, you can adjust the foot pressure manually by pressing the “+” key or “–” key to suit your specific sewing needs.

Foot up for Pivoting

If this option is turned on, the presser foot will automatically go up when the machine stops.
This feature is very useful when turning corners.

Press the foot-up key to turn this option on or off.

① Foot-up key

NOTE:
Height of the foot can be altered in the ordinary sewing setting mode (refer to page 102).

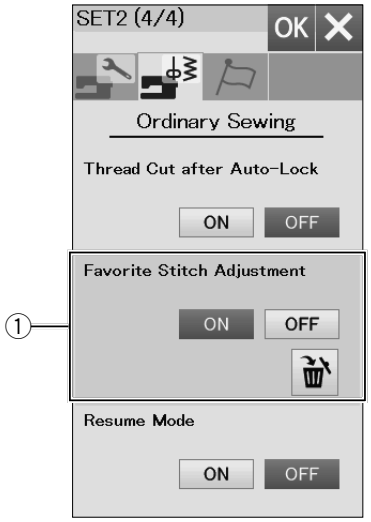

Favorite Stitch Adjustment

You can save customized stitch settings (stitch length, stitch width, thread tension and presser foot pressure, depending on the selected stitch patterns) as Favorite Stitch Adjustment. When the favorite stitch adjustment option is turned ON ① (refer to page 103), the last-used customized stitch settings are automatically assigned when the stitch pattern is selected.

NOTE:
Favorite stitch option cannot be assigned for created stitch (CS).
Favorite stitch option cannot be used in monogram mode.

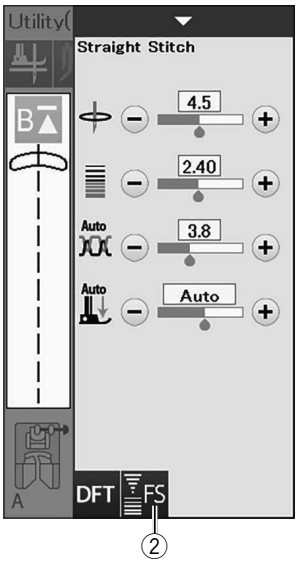

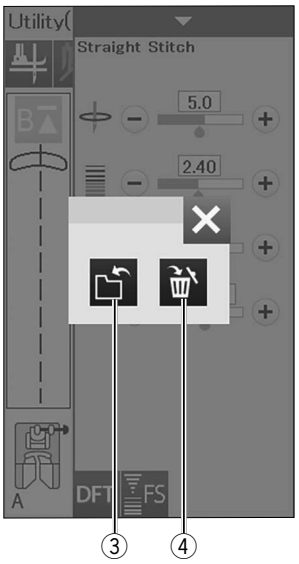

Example: To change the preset value of the needle drop position from “4.5” to “5.0”.

Turn the Favorite Stitch Adjustment option ON (refer to page 103).
Select stitch pattern U1.
Press the setting bar. The manual setting window expands to show more options.
The favorite stitch key ② appears on the manual setting window.

Change the needle drop position from “4.5” to “5.0” by pressing “+” key.
Press the favorite key ②.
The dialog box will open.
Press the save favorite key ③ to register the favorite stitch settings.

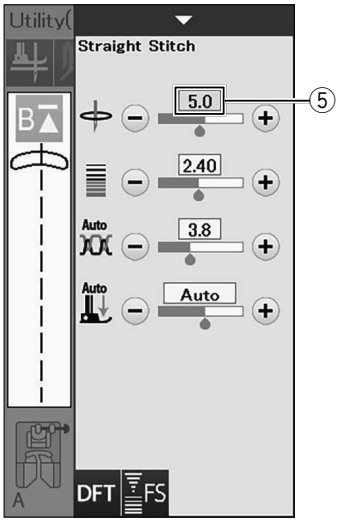

The cream colored box ⑤ indicates that the customized preset stitch value is applied to the setting.

To delete favorite stitch settings, press the favorite stitch key and press the delete key ④.

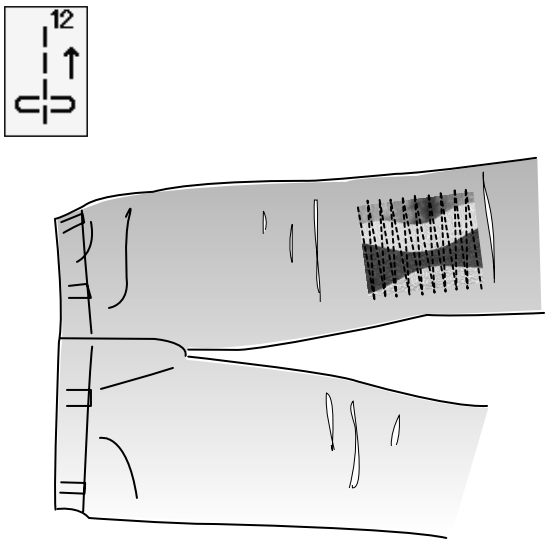

Other Utility Stitches

U12 Backward stitch

U12 is backward stitch.
Use the stitch if it is hard to guide the fabric while pressing the reverse button.
The machine sews in reverse without pressing the reverse button so that you can guide the fabric with both hands.

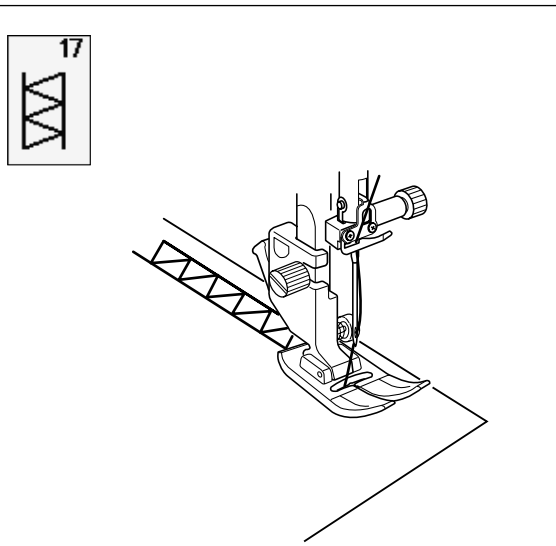

U17 Hemstitch

Use this stitch for fagoting or decorative stitch.

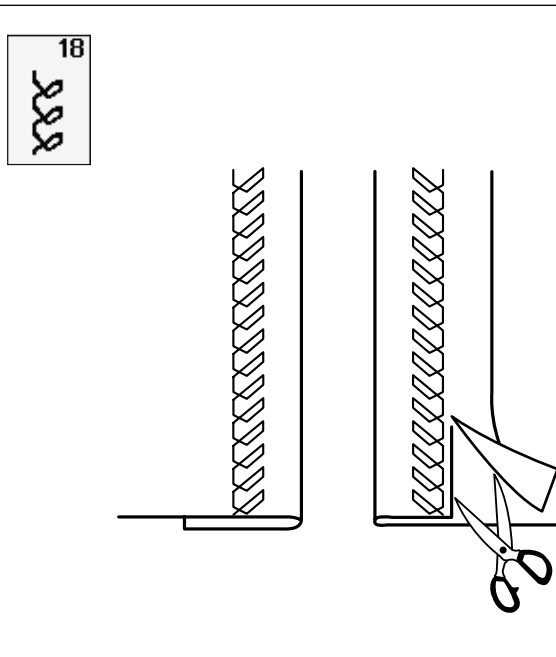

U18 Visible hemming

Select pattern U18.

Fold and press a single hem. Place the fabric with the right side up.
Sew along the fold at the desired depth.
Trim the excess on the wrong side.

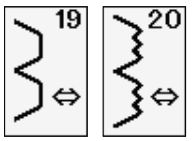

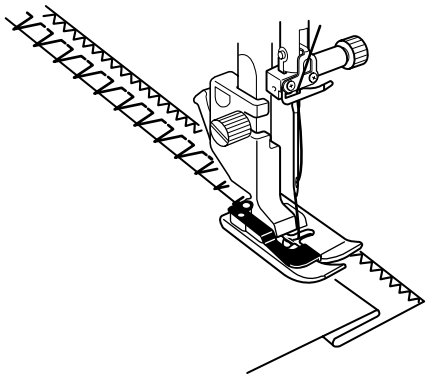

U19, U20 Blind Hem
Refer to pages 81-82 for sewing instruction.

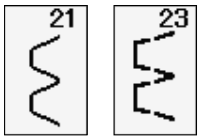

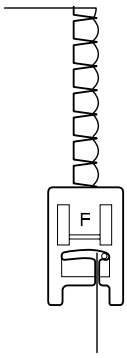

U21, U23 Shell Tuck
Refer to page 82 for sewing instruction.

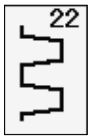

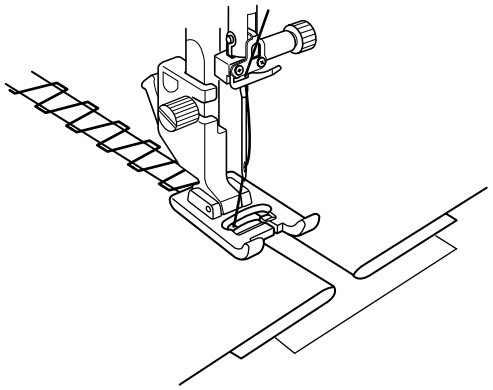

U22 Fagoting
Use the stitch to join two pieces of fabric to create an open work appearance and add stitch interest.

BUTTONHOLES AND SPECIALTY STITCHES

Variety of Buttonholes

B1 Sensor (Square) buttonhole
This square buttonhole is widely used on medium to heavy weight fabrics. The buttonhole size is automatically determined by placing a button in the foot.

B2 Auto (Square) buttonhole
This is also a square buttonhole similar to the sensor square buttonhole, but you can manually set the buttonhole size and the machine memorizes it to sew buttonholes of the same size.

B3 Round end buttonhole
This buttonhole is used on fine to medium weight fabrics especially for blouses and children's clothes.

B4 Fine fabric buttonhole
This buttonhole is rounded at both ends and is used on fine, delicate fabrics such as fine silk.

B5 Keyhole buttonhole
The keyhole buttonhole is widely used on medium to heavy weight fabrics. It is also suitable for larger and thicker buttons.

B6 Rounded keyhole buttonhole
This buttonhole is used for thicker buttons on medium weight fabrics.

B7 Tailored buttonhole
This durable buttonhole is used with thick buttons and heavy fabrics.

B8 Stretch buttonhole
This buttonhole is suitable for stretch fabrics. It can also be used as a decorative buttonhole.

B9 Knit buttonhole
This buttonhole is suitable for knit fabrics. It can also be used as a decorative buttonhole.

B10 Antique buttonhole
This buttonhole looks like the heirloom stitch. It has an attractive handmade appearance and makes a nice decorative buttonhole.

B11 Welted buttonhole
This is a template pattern for the hand sewn welted (bound) buttonhole.

NOTE:
B3-B11 are sensor buttonholes and the sewing procedure is the same as for B1.

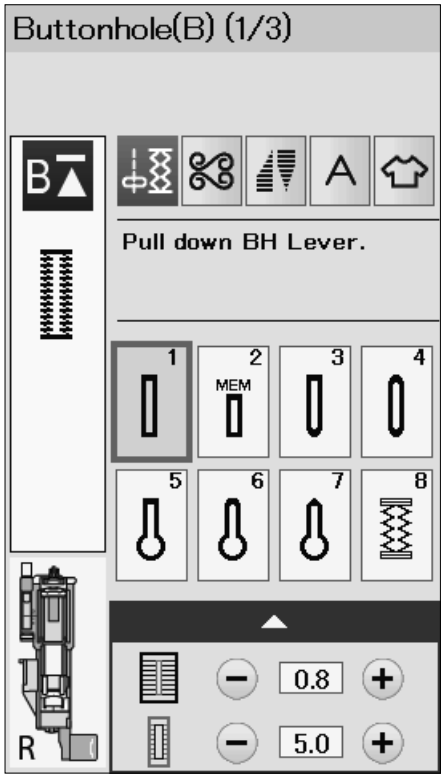

B1 Sensor (Square) Buttonhole

The size of a buttonhole is automatically set by placing a button in the rear of automatic buttonhole foot R.
The button holder of the foot takes a button size of 1 cm (3/8″) to 2.5 cm (1″) in diameter.
When selecting the buttonholes, the visual touch screen advise you to lower the buttonhole lever.

NOTE:
It is sometimes necessary to change buttonhole size to match certain heavy or specific fabrics and threads. Make a test buttonhole on an extra piece of the fabric to check your settings.
The preset width of the buttonhole is suited for ordinary buttons.
Apply an interfacing to stretch or fine fabrics.

1

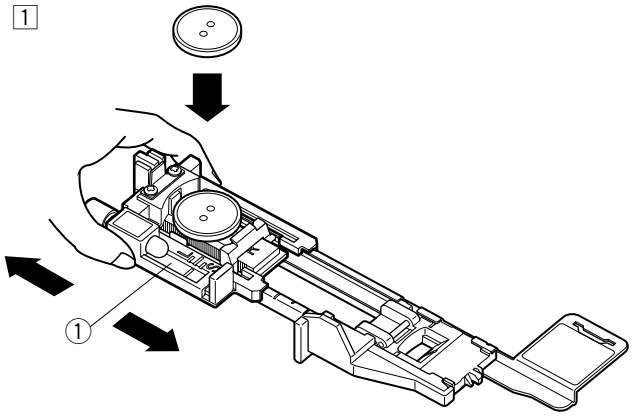

Sewing

1 Pull the button holder to the back, and place the button in it. Push it together tightly on the button.

① Button holder

NOTE:
Check the length of the test buttonhole, and adjust the buttonhole length if necessary by turning the adjusting screw on the buttonhole foot.
To increase the buttonhole length, turn the adjusting screw to move the marker toward “L”.
To decrease the buttonhole length, turn the adjusting screw to move the marker toward “S”.

② Adjusting screw
③ Marker

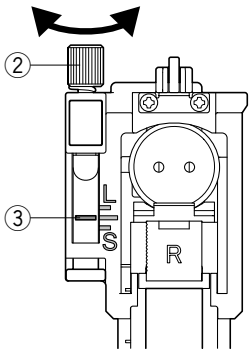

2

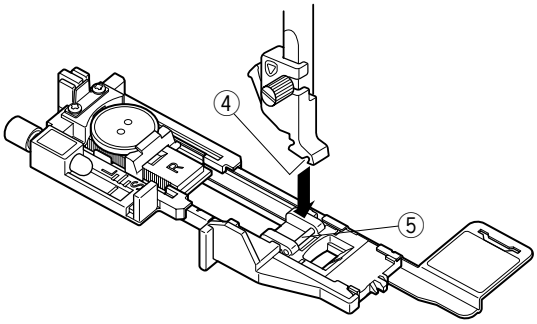

2 Press the needle up/down button to raise the needle.

Press the lockout key.

Raise the presser foot and attach the automatic buttonhole foot R snapping the pin into the groove of the foot holder.

You may lift the presser foot lifter to the extra lifted position when placing the automatic buttonhole foot under the foot holder.

④ Groove
⑤ Pin

3

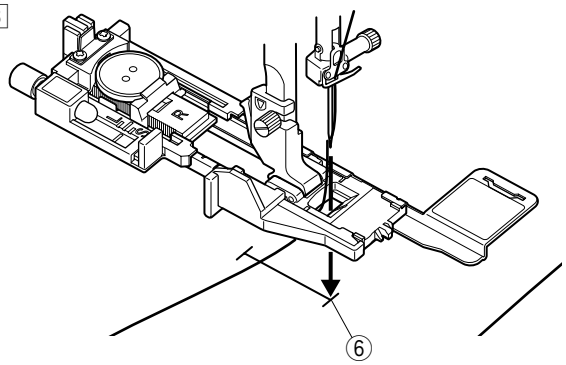

3 Draw the needle thread to the left through the hole of the foot.

Press the lockout key to unlock the machine.

Mark the buttonhole position on the fabric and place it under the buttonhole foot. Lower the needle at the starting point by turning the handwheel.

⑥ Starting point

4

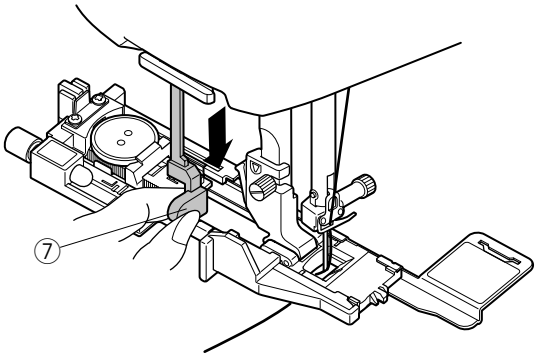

4 Lower the presser foot and pull the buttonhole lever down as far as it will go.

⑦ Buttonhole lever

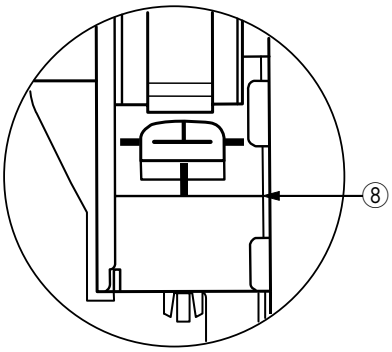

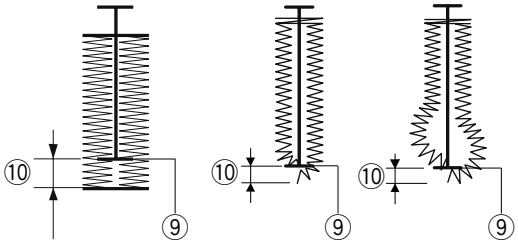

NOTE:
Make sure there is no gap between the slider and front stopper, otherwise the buttonhole will be out of position or there will be a sewing gap.

⑧ No gap
⑨ Starting point
⑩ Sewing gap

5

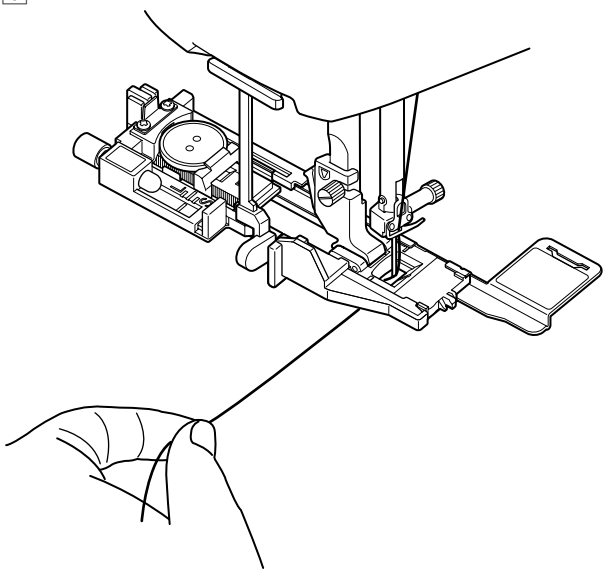

5 Start sewing while pulling the needle thread lightly to the left. After sewing a few stitches, free the thread and continue sewing.

NOTE:
If you start sewing without pulling down the buttonhole lever, the visual touch screen will show a warning and the machine will stop after a few stitches. Pull the buttonhole lever down and start sewing.

6

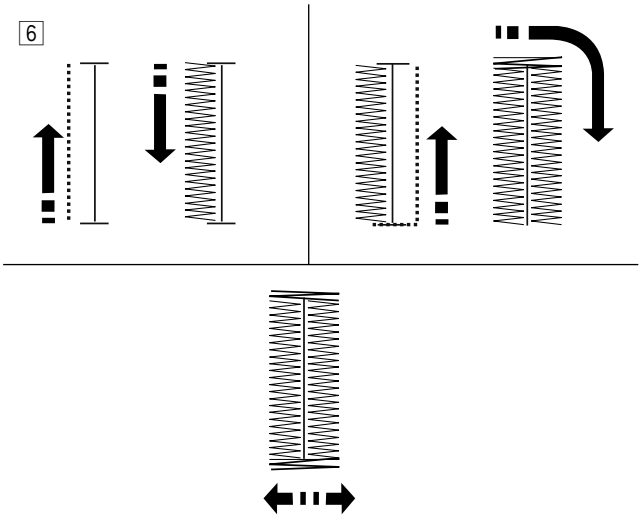

6 The buttonhole is sewn automatically in the sequence shown. When the buttonhole is finished, the machine will stop automatically with the needle in the up position. Press the thread cutter button and remove the fabric.

7

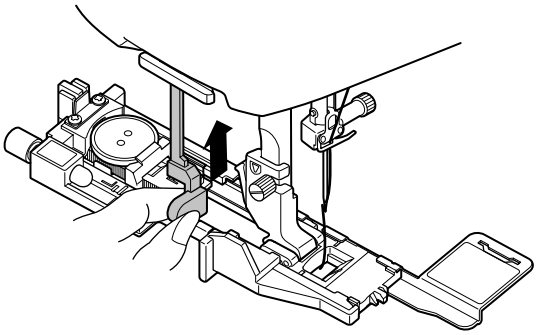

7 After you finish buttonhole sewing, push the buttonhole lever up as far as it will go.

8

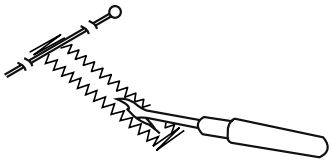

8 Place a pin just below the bartack at each end to prevent accidentally cutting the threads. Cut the opening with the seam ripper. Use an eyelet puncher to open a keyhole buttonhole.

Double layer buttonhole

To make a sturdy buttonhole, sew another layer of buttonhole stitches over the previous stitches.
After the buttonhole is finished, simply start the machine again.
Do not raise the foot or buttonhole lever.
Do not reselect the pattern.

NOTE:
This function is disabled if Thread Cut after Auto-Lock option is turned on in the ordinary sewing setting mode (refer to page 103).

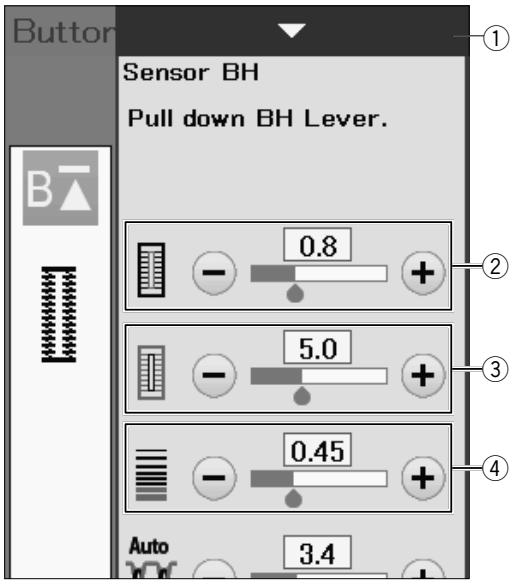

Manual settings

When you press the setting bar, the manual setting window expands to show more options.

① Setting bar

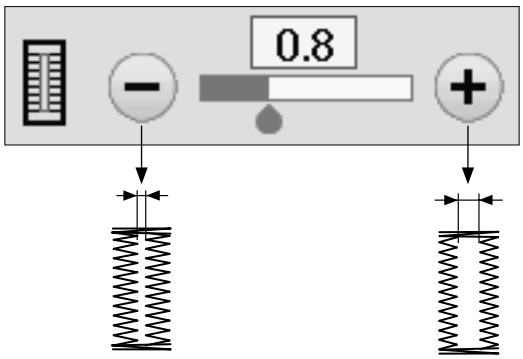

② **Altering buttonhole opening width**

Press the “+” key to make the buttonhole opening wider.
Press the “–’’ key to make the buttonhole opening narrower.

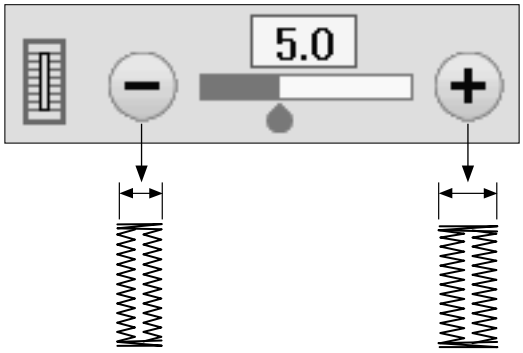

③ **Altering buttonhole width**

Press the “+” key to increase the buttonhole width.
Press the “–” key to decrease the buttonhole width.

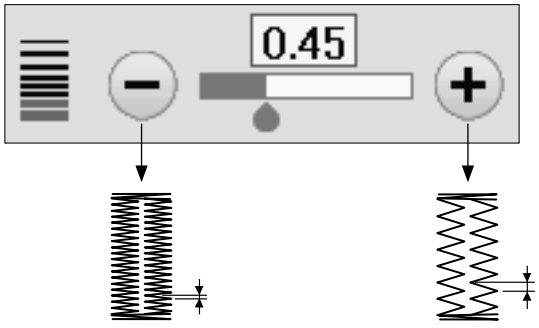

④ **Altering buttonhole stitch density**

Press the “+” key to make the buttonhole stitches less dense.
Press the “–” key to make the buttonhole stitches denser.

NOTE:
The opening width can be adjusted from 0.2 to 2.0.
The buttonhole width can be adjusted from 2.6 to 9.0.
The stitch density can be adjusted from 0.20 to 1.00.

Using the Stabilizer Plate

The stabilizer plate holds and supports the fabric so it is helpful when sewing buttonholes over the hem of thick fabrics.

1

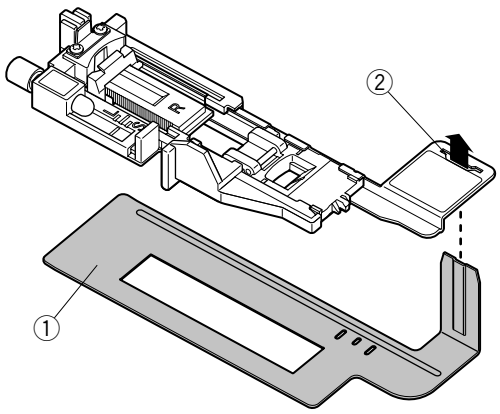

1 Insert the tab of the stabilizer plate ① into the slot ② of the buttonhole foot.

① Stabilizer plate
② Slot

2

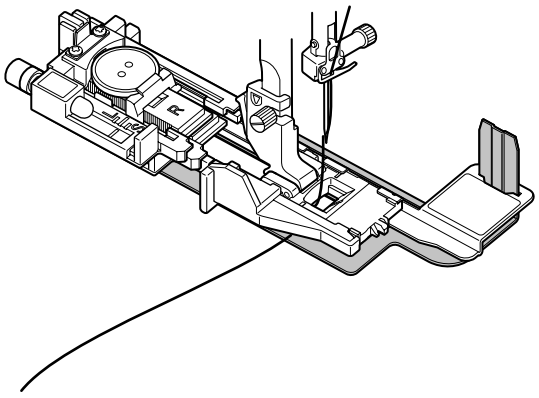

2 Place the button on the button holder of the foot. Attach the buttonhole foot to the machine.

Draw the needle thread to the left between the foot and stabilizer plate.

3

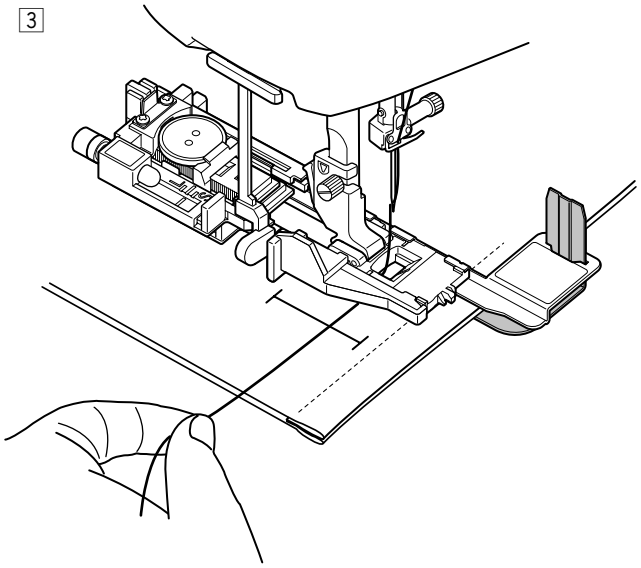

3 Place the fabric between the buttonhole foot and stabilizer plate. Lower the needle into the starting point by turning the handwheel.

Lower the foot and buttonhole lever.

Start the machine while pulling the needle thread lightly to the left. After sewing a few stitches, free the thread and continue sewing.

NOTE:
The sewing procedure is exactly the same as that for B1 sensor (square) buttonholes.

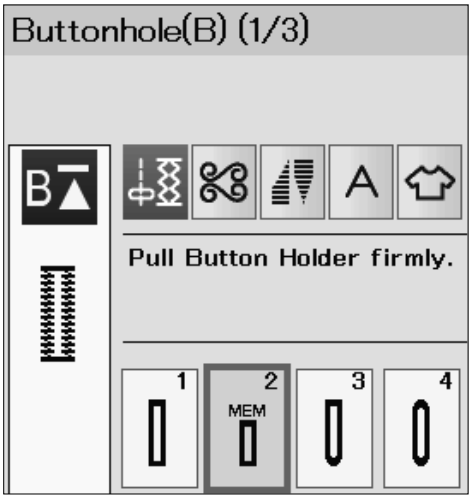

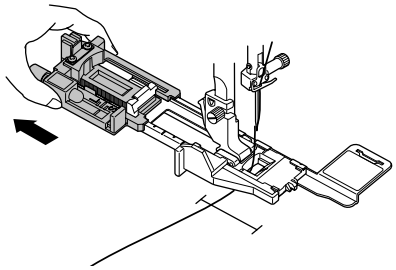

B2 Automatic (square) Buttonhole

Pull the button holder all the way out.
Mark the buttonhole position on the fabric.
Place the fabric under the foot, and lower the needle at the starting point.
Lower the foot and start sewing while pulling the needle thread lightly to the left. After sewing a few stitches, free the thread and continue sewing.

NOTE:
You do not need to pull down the buttonhole lever.
If you wish to sew a buttonhole longer than the size permitted by the automatic buttonhole foot R, use satin stitch foot F.

NOTE:
The opening width can be adjusted from 0.2 to 2.0.
The buttonhole width can be adjusted from 2.6 to 9.0.
The stitch density can be adjusted from 0.20 to 1.00.

1

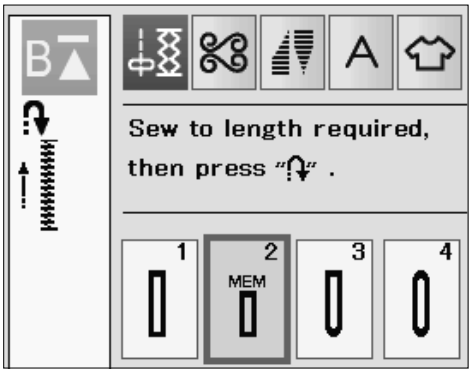

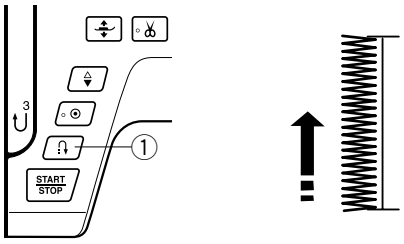

1 Sew the left side up to the required buttonhole length and stop the machine. Then press the reverse button ①.

2

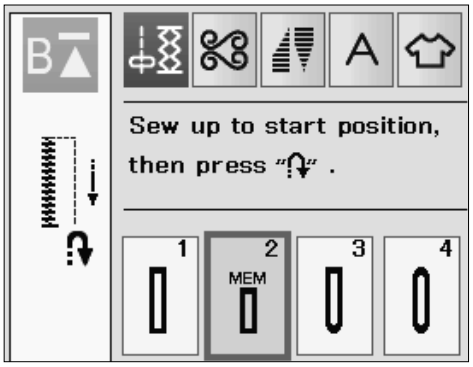

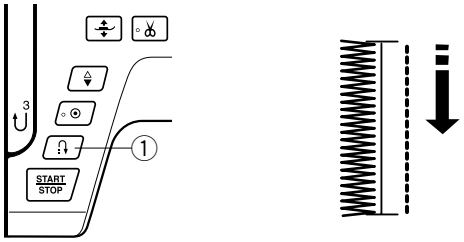

2 Start sewing again, and the machine sews back with a straight stitch.
Stop the machine when you reach the starting point.
Then press the reverse button ①.

3

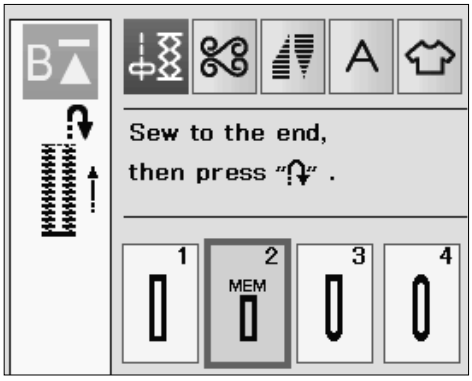

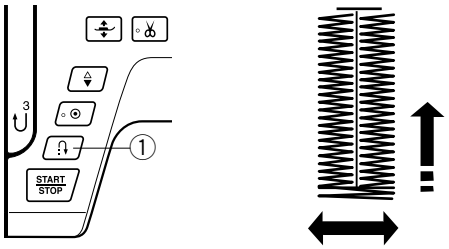

3 Start sewing again, and the machine sews the front bartack and right side of the buttonhole.

Stop the machine when you reach the ending point.

Then press the reverse button ①.

4

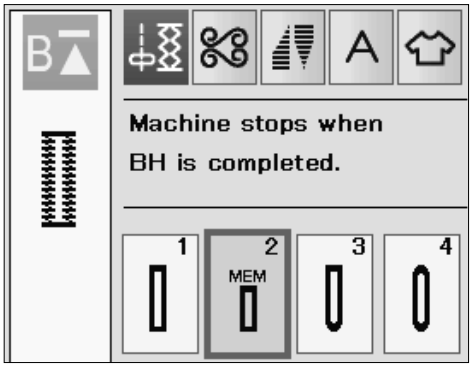

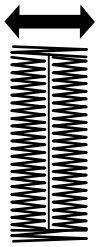

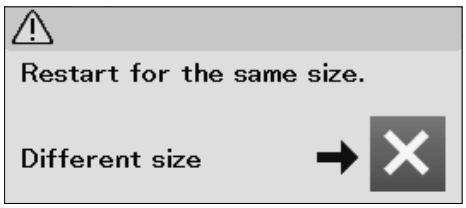

4 Start sewing again, and machine sews the back bartack and locking stitches then stops automatically with the needle in the up position.

When the buttonhole is finished, a message will appear.

To make the next buttonhole, position the fabric and start sewing again. The message disappears and the machine sews another buttonhole identical to the first one then stops automatically.

To sew another buttonhole in a different size press the X key on the dialog box.

NOTE:
To cut the buttonhole opening, refer to the instructions on page 43.
The memorized length will be cancelled if the presser foot is raised or the startover key is pressed before buttonhole is completed.

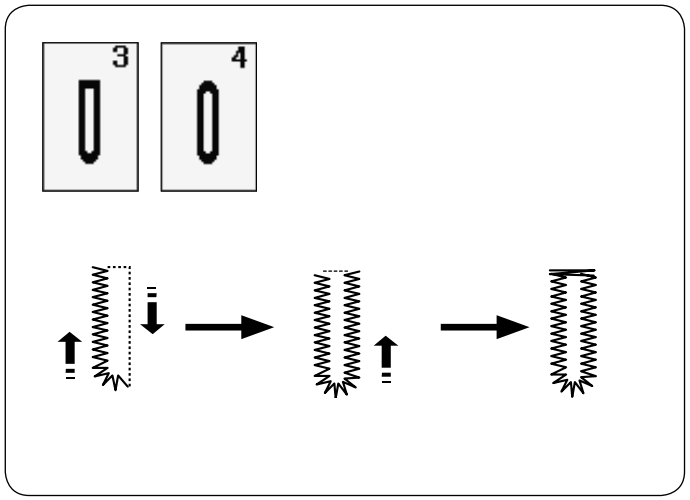

Other Buttonholes

B3, B4 Round end and fine fabric buttonholes

The sewing procedure is the same as that of B1 square (sensor) buttonhole (refer to pages 41-43).

NOTE:
The opening width can be adjusted from 0.2 to 2.0.
The buttonhole width can be adjusted from 2.6 to 9.0.
The stitch density can be adjusted from 0.20 to 1.00.

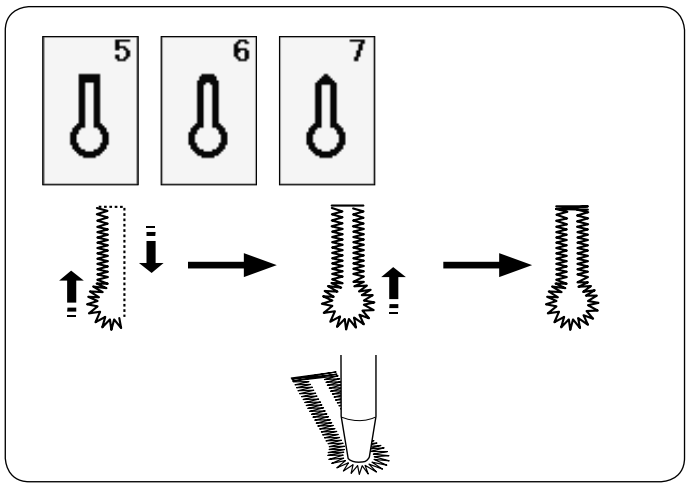

B5-B7 Keyhole buttonholes

The sewing procedure is the same as B1 square (sensor) buttonhole (refer to pages 41-43).
Use an eyelet punch to open the keyhole buttonhole.

NOTE:
The opening width can be adjusted from 0.2 to 2.0.
The buttonhole width can be adjusted from 5.6 to 9.0.
The stitch density can be adjusted from 0.20 to 1.00.

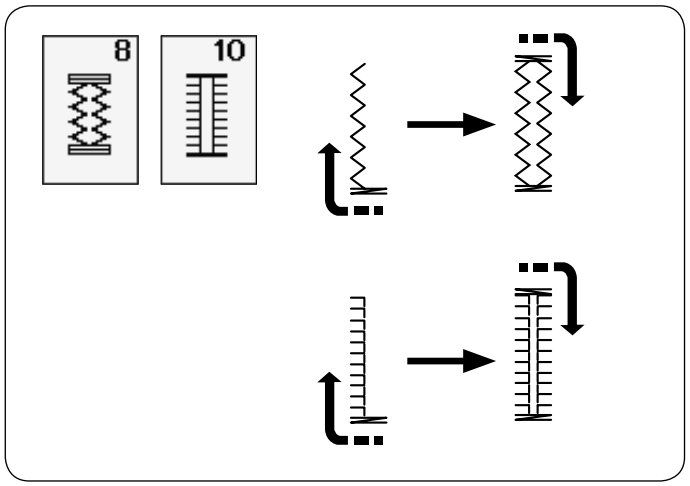

B8, B10 Stretch and Antique buttonholes

The sewing procedure is the same as B1 square (sensor) buttonhole (refer to pages 41-43).
The sewing steps are as shown.

NOTE:
The opening width can be adjusted from 0.2 to 2.0.
The buttonhole width can be adjusted from 2.6 to 9.0.
The stitch density can be adjusted from 0.50 to 1.00 (B8), from 0.50 to 2.50 (B10).

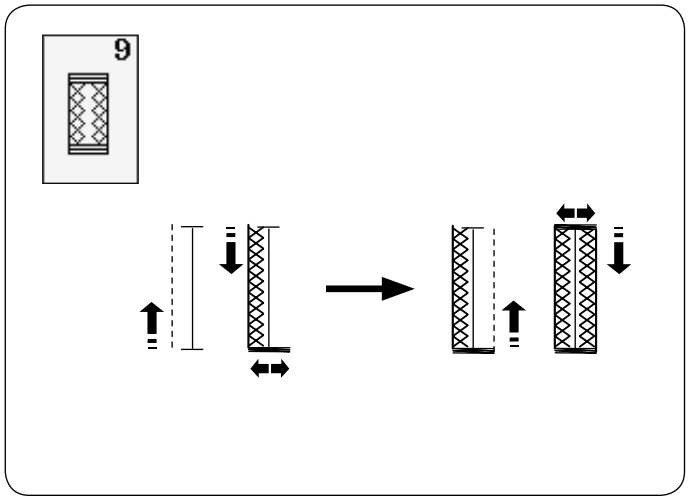

B9 Knit buttonhole

The sewing procedure is the same as B1 square (sensor) buttonhole (refer to pages 41-43).

NOTE:
The opening width can be adjusted from 0.2 to 2.0.
The buttonhole width can be adjusted from 2.6 to 9.0.
The stitch density can be adjusted from 0.70 to 1.20.

B11 Welted Buttonhole (Bound Buttonhole)

A welted buttonhole is made by stitching a strip or patch of fabric to the buttonhole.
Welted buttonholes are particularly suitable for tailored garments, but are not recommended for sheer or delicate fabrics where the patch might show through or add bulk.

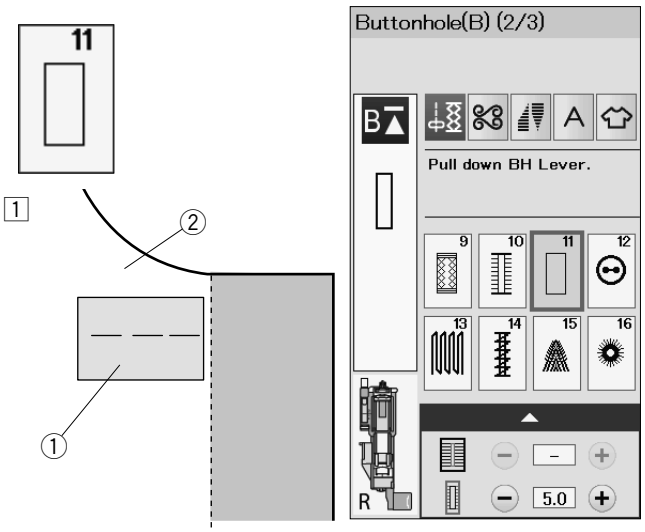

1 Baste a patch to the garment fabric with the right sides together.

① Wrong side of patch
② Right side of garment fabric

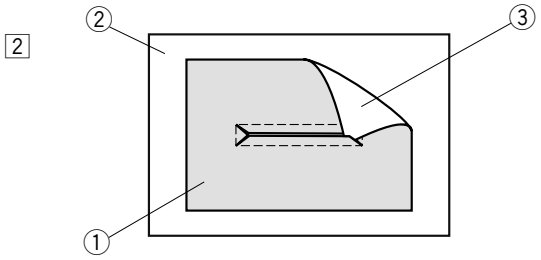

2 Select pattern B11.

Sew the welted buttonhole on both fabrics together.

Cut the buttonhole opening as illustrated then pull the patch out through the slit to the other side.

① Wrong side of patch
② Right side of garment fabric
③ Right side of patch

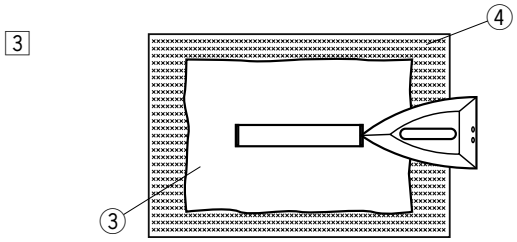

3 Pull out the patch until the right side of the patch is showing. Use an iron to press both corner ends until they are squared off.

③ Right side of patch
④ Wrong side of garment fabric

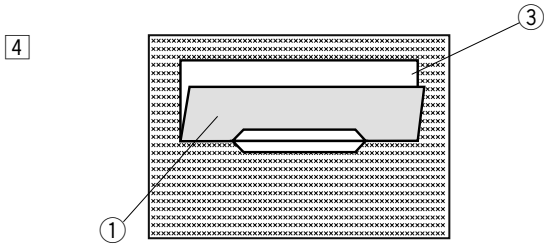

4 Fold back each side of the patch to form buttonhole lips.

① Wrong side of patch
③ Right side of patch

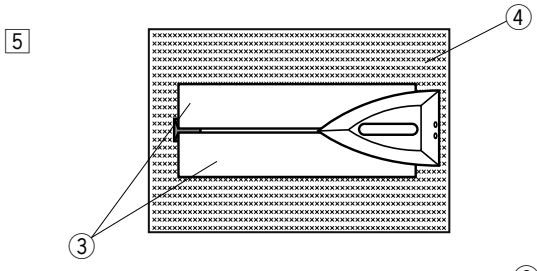

5 Press both folds with an iron.

③ Right side of patch
④ Wrong side of garment fabric

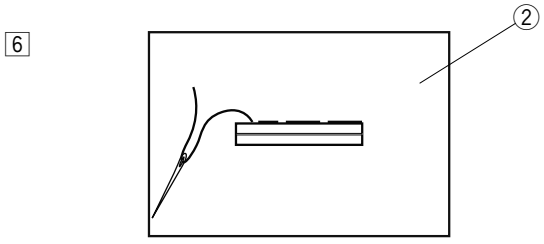

6 Baste both edges of the seam with a needle and thread by hand.

② Right side of garment fabric

7

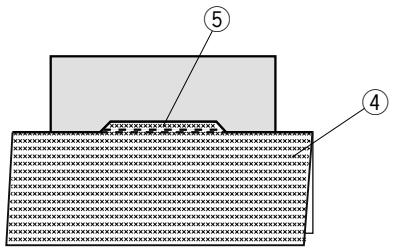

7 Fold over the length of the garment fabric, sew back and forth beside the original seam to secure flaps of the patch.

④ Wrong side of garment fabric
⑤ Sew back and forth

8

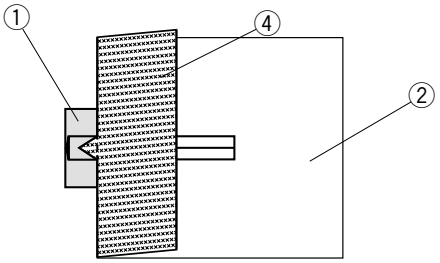

8 Fold over the end of fabric and sew back and forth three times over the triangular end.

① Wrong side of patch
② Right side of garment fabric
④ Wrong side of garment fabric

9

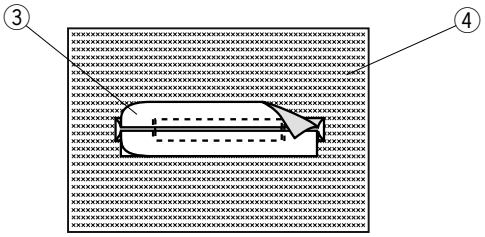

9 The patch should be cut 1 cm to 1.5 cm (7/16″-5/8″) away from the hole. The corners should be cut rounded off as shown.

③ Right side of patch
④ Wrong side of garment fabric

10

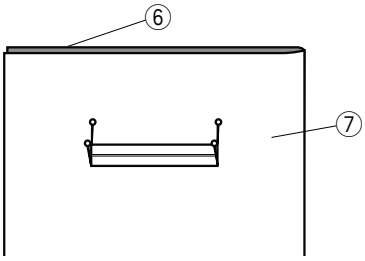

10 Place the facing on the wrong side of the garment fabric. Mark the 4 corners with pins as shown.

⑥ Facing
⑦ Garment fabric

11

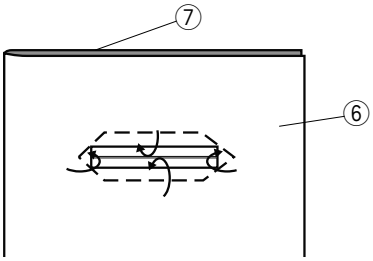

11 Turn all the layers over and cut the buttonhole opening on the facing in the same way as step 2.

Four marker pins show you the corner points on the facing. Fold back each flap between the facing and patch.

⑥ Facing
⑦ Garment fabric

12

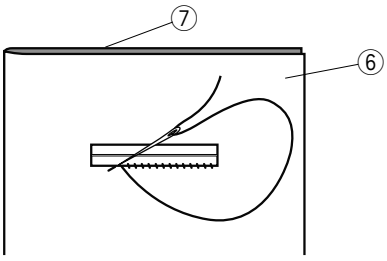

12 Stitch around the opening with a needle and thread as shown.

⑥ Facing
⑦ Garment fabric

13

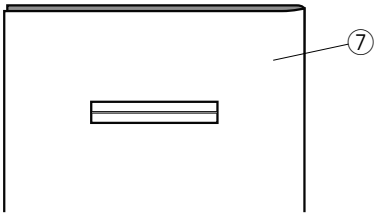

13 The welted buttonhole is complete.

⑦ Garment fabric

Corded Buttonhole

To sew a corded buttonhole, follow the same procedure as for B1 square (sensor) buttonhole.

Select pattern B1.

1

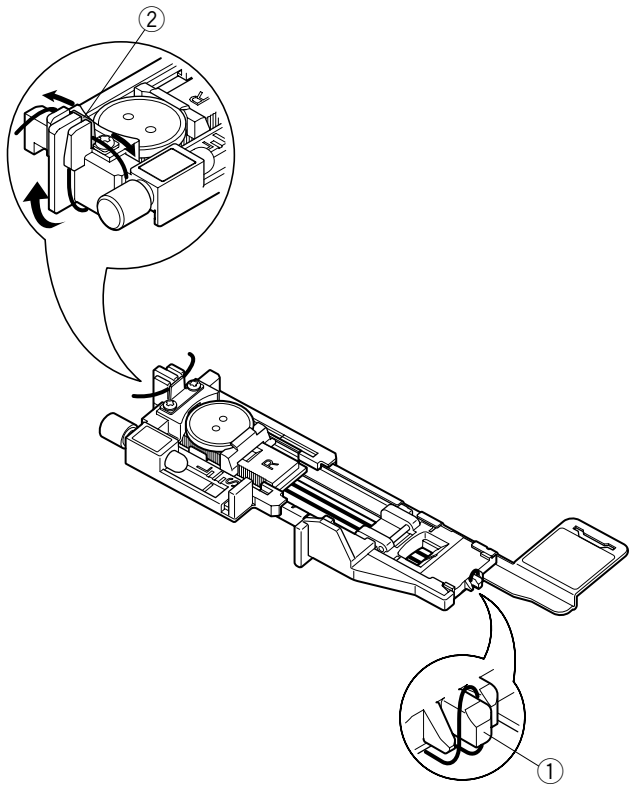

1 Place the button on the button holder on the buttonhole foot.

Hook a filler cord on the spur on the front of the foot.

Bring the ends of cord toward the back and under the foot.

Bring up the ends of the cord and insert both ends between the ribs and metal plate.

① Spur
② Metal plate

Set the stabilizer plate as necessary and attach the buttonhole foot.

2

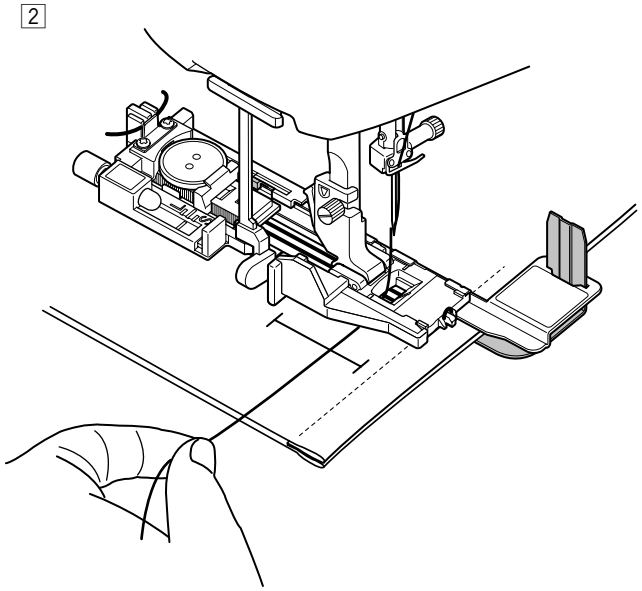

2 Lower the needle into the fabric where the buttonhole will start.

Lower the foot and buttonhole lever.

Pull the needle thread lightly to the left.

Start the machine to sew the buttonhole over the cord.

The machine stops automatically when finished.

Remove the fabric from the machine and cut the sewing threads only.

3

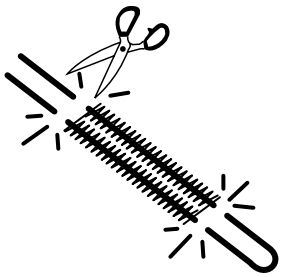

3 Cut the filler cord at both ends as close to the buttonhole as possible.

NOTE:
Do not adjust the opening width wider than 0.8.
Set the stitch width in accordance with the thickness of the cord used.
To cut the buttonhole opening, refer to the instructions on page 43.

Speciality Stitches

See pages 90 and 91 for referring sewing instructions of B12 and B14.

B13 Darning

1 Attach the automatic buttonhole foot R and pull the button holder all the way out.

Place the fabric under the foot, and lower the needle at the starting point. Then lower the foot.

① Button holder
② Starting point

2 Start the machine and continue sewing until the machine stops automatically. When finished sewing, a confirmation message will appear.

NOTE:
The machine will sew the darning at maximum 2 cm (3/4″) length and fixed 0.9 cm (3/8″) width when sewing until it stops automatically.

③ 2 cm (3/4″)

3 Sew another layer of darning over the first layer, at a right angle to it.

To sew a shorter darning

Sew the first line to the desired length and stop the machine.
Press the reverse button and start the machine again.
The machine will sew the rest of the darning and stop automatically.

④ Required length
⑤ Reverse button

To sew the same size darning

When finished sewing, a confirmation message will appear.
Simply start the machine to sew another layer of darning stitches in the same size.
To sew the next layer of darning stitches in a different size, press the X key.

To adjust the evenness of darning stitches

You can correct unevenness of darning stitches by pressing the “–” or “+” key of the adjusting window.
If the left corner is lower than the right side, press the “–” key to correct it.
If the right corner is lower than the left side, press the “+” key to correct it.

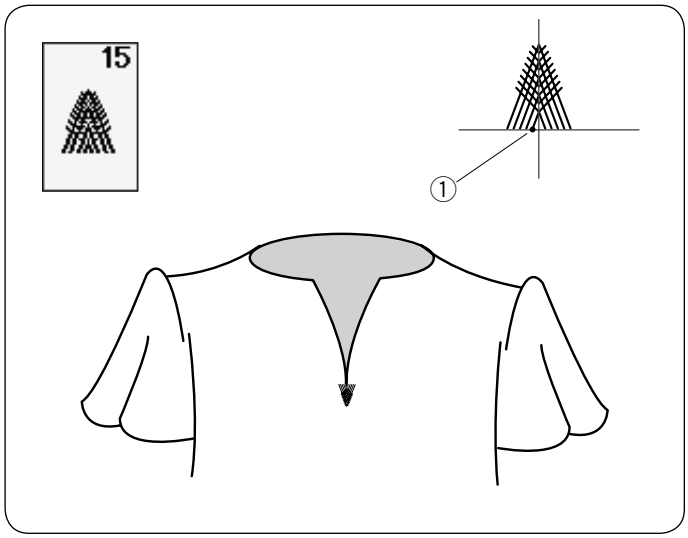

B15 Fly Stitch

The fly stitch is a triangle tacking stitch for use on a zipper fly bottom and on the side pockets of men's pants.

Attach the satin stitch foot F.

To sew:

Place the garment under the foot and lower the needle at the starting point.

Sew the stitch until the machine stops automatically.

① Starting point

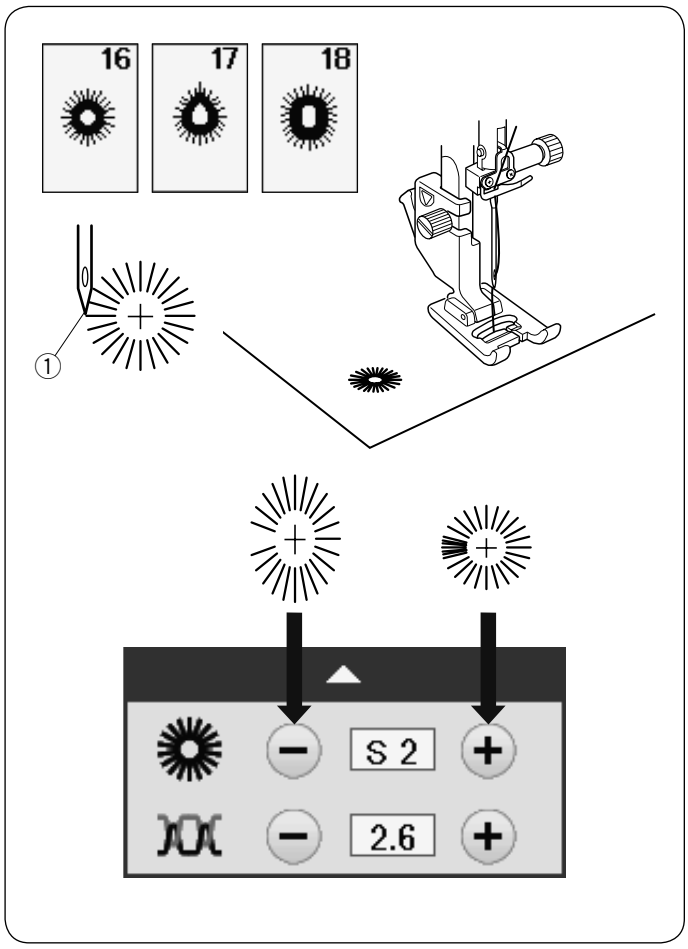

B16-B18 Eyelets

Eyelets are used for belt holes, etc.

Attach the satin stitch foot F.

To sew:

Place the garment under the foot and lower the needle to the starting point.

Sew until the machine stops automatically.

① Starting point

Open the eyelet with an awl, puncher or pointed scissors.

To correct the shape of an eyelet:

If the eyelet is open, press the "–" key.

If the eyelet overlaps, press the "+" key.

NOTE:
The shape can be adjusted within S1 to S3 (default setting is S2).

DECORATIVE STITCHES

Decorative Stitches

The patterns in this section are classified into 10 groups. These patterns are programmable and you can make a pattern combination.

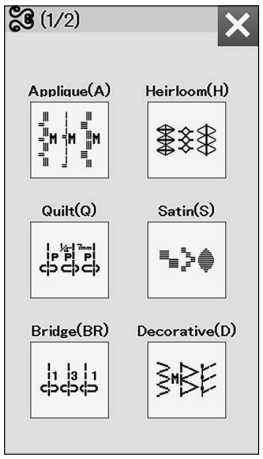

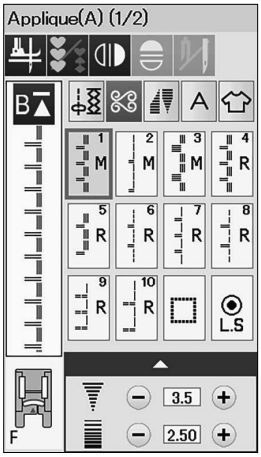

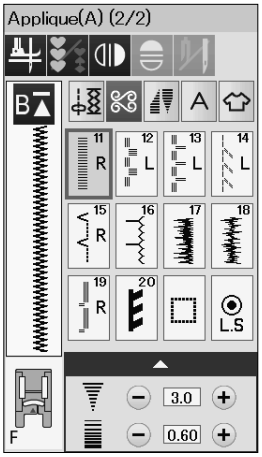

Applique stitches (A): 2 pages
Stitches in this group are for applique (refer to page 92).

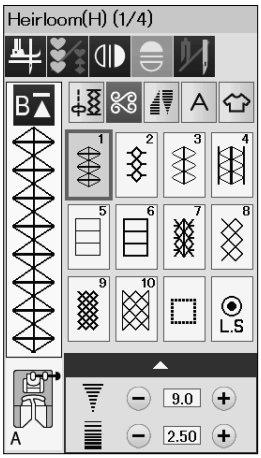

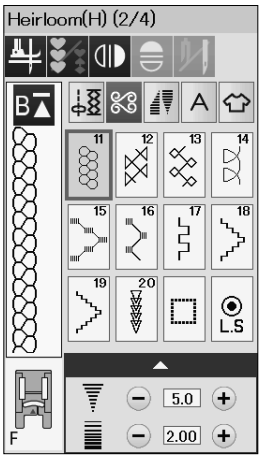

Heirloom stitches (H): 4 pages
This group provides heirloom stitches and cross stitches for craft sewing and home décor.

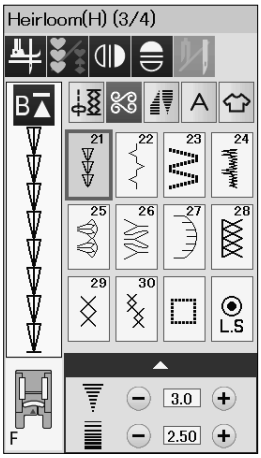

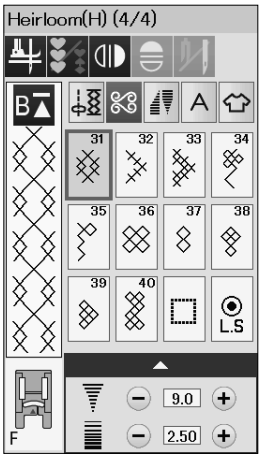

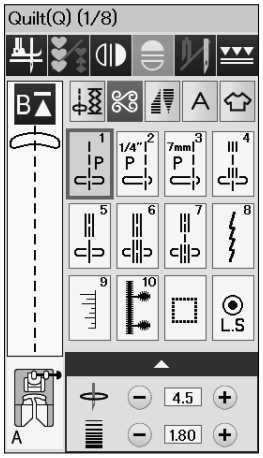

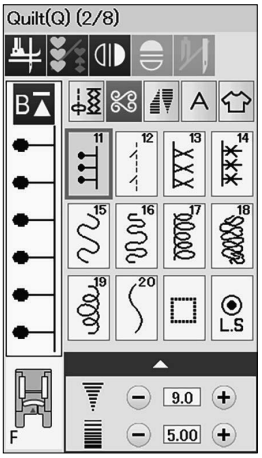

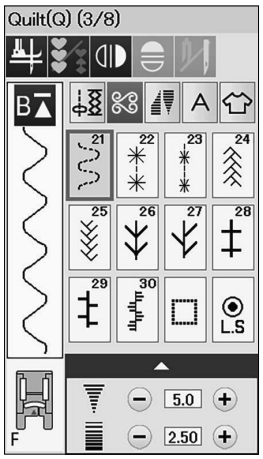

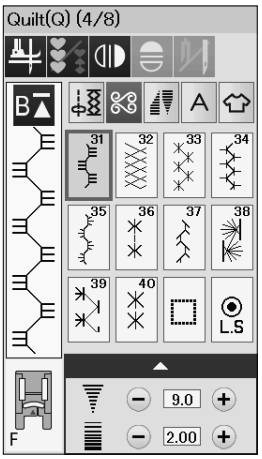

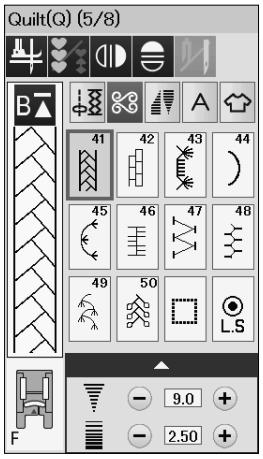

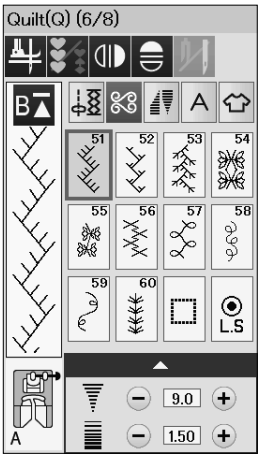

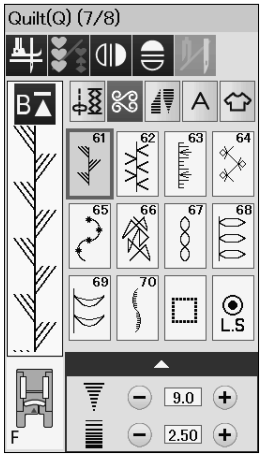

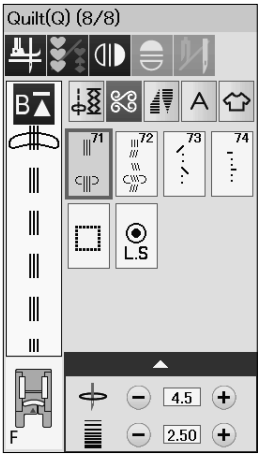

Quilting stitches (Q): 8 pages
Stitches in this group are for patchwork and quilting (refer to pages 60-61, 93-97).

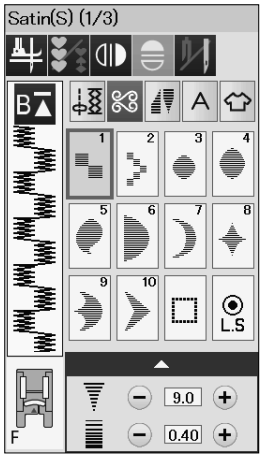

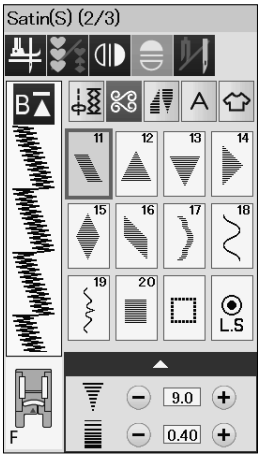

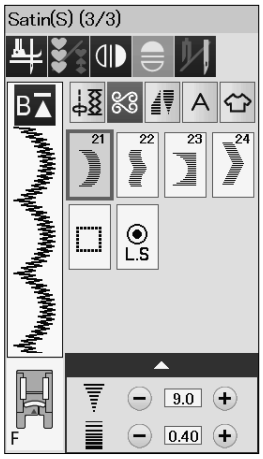

Satin stitches (S): 3 pages
The stitches in this group can be elongated up to 5 times their original length while the stitch density remains the same (refer to page 61).

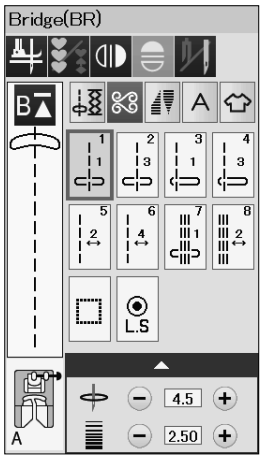

Bridge stitches (BR): 1 page
Bridge stitches are used for inserting straight stitches after a stitch pattern.
The number beside the stitch image on the straight stitch key indicates the stitch count of a programmable unit.
Patterns BR5, BR6 and BR8 will inherit the needle drop position and stitch length of the previous pattern in the programmed pattern combination (refer to page 64).

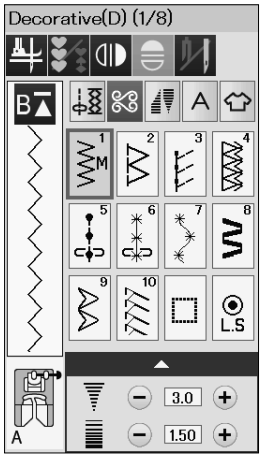

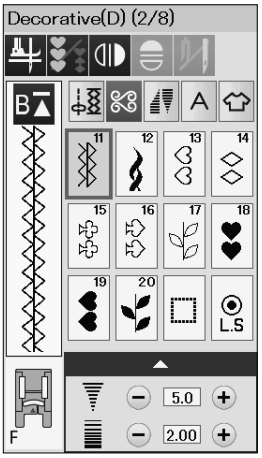

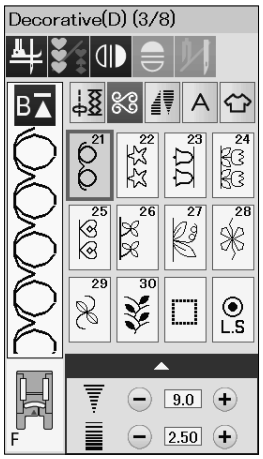

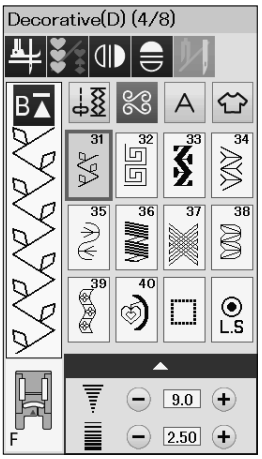

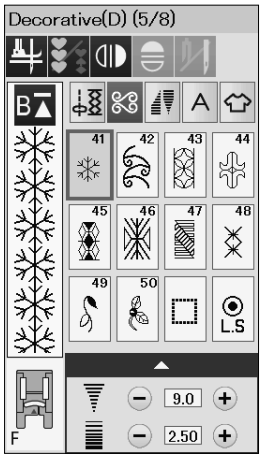

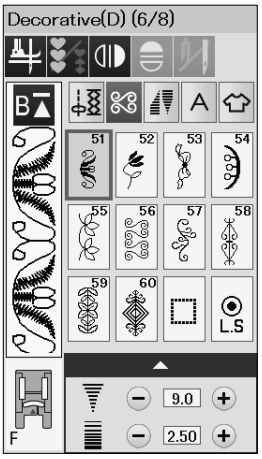

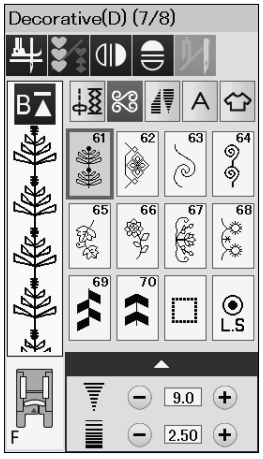

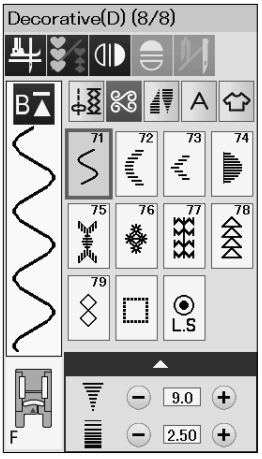

Decorative stitches (D): 8 pages
79 attractive patterns are available in this group.

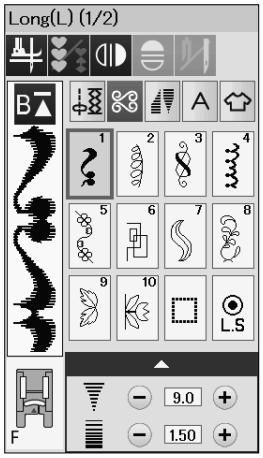

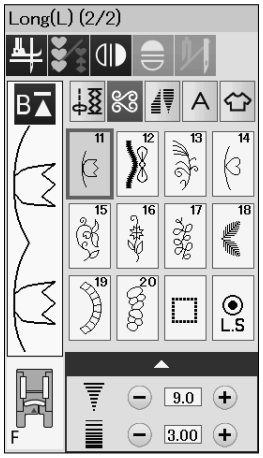

Long stitches (L): 2 pages
Patterns in this group are ideal for decorating garments and for adding border trims.

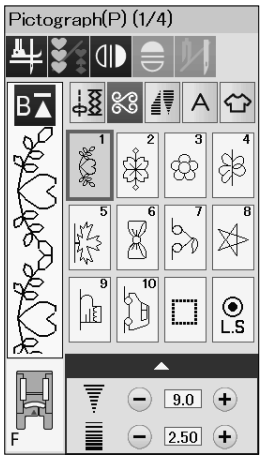

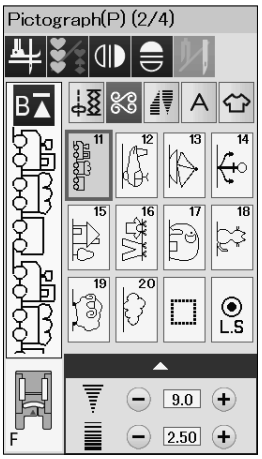

Pictograph stitches (P): 4 pages
Play stitches (PL): 1 page
There are many cute designs, fancy motifs and calligraphy available in these groups.

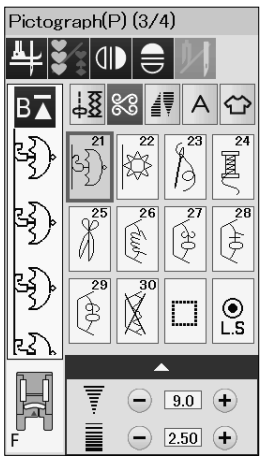

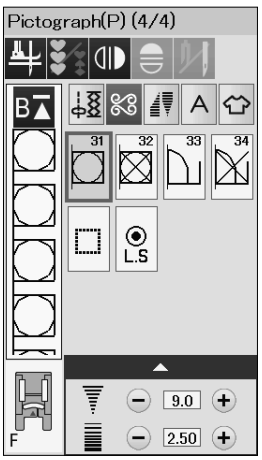

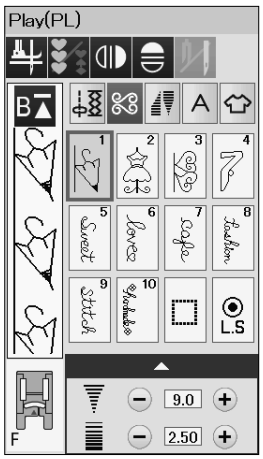

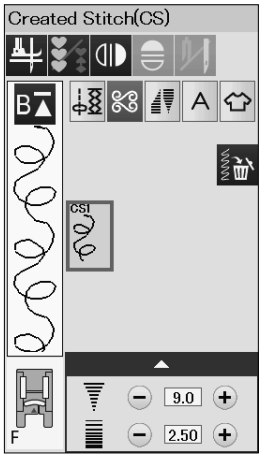

Created stitches (CS)
In this section, you can select original stitch patterns created with StitchComposer.
Refer to page 62 for how to transfer created stitch patterns from the PC to the machine.

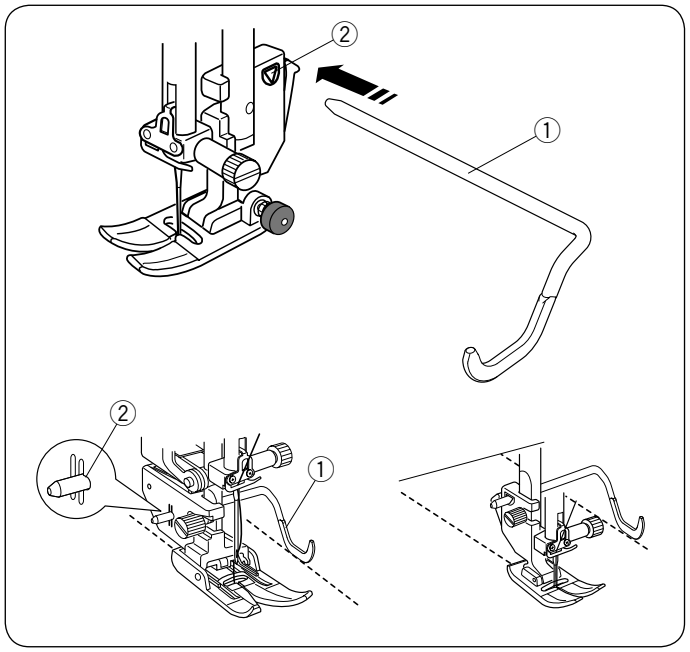

Quilting (Q)

Using the Quilting Guide Bar

The quilting guide bar is helpful when sewing parallel, evenly spaced rows of stitches.

Insert the quilting guide bar into the hole in the back of the foot holder. Slide the quilting guide bar and set it to the desired spacing.

① Quilting guide bar
② Hole

Sew rows of stitches while tracing the previous row of stitches with the quilting guide bar.

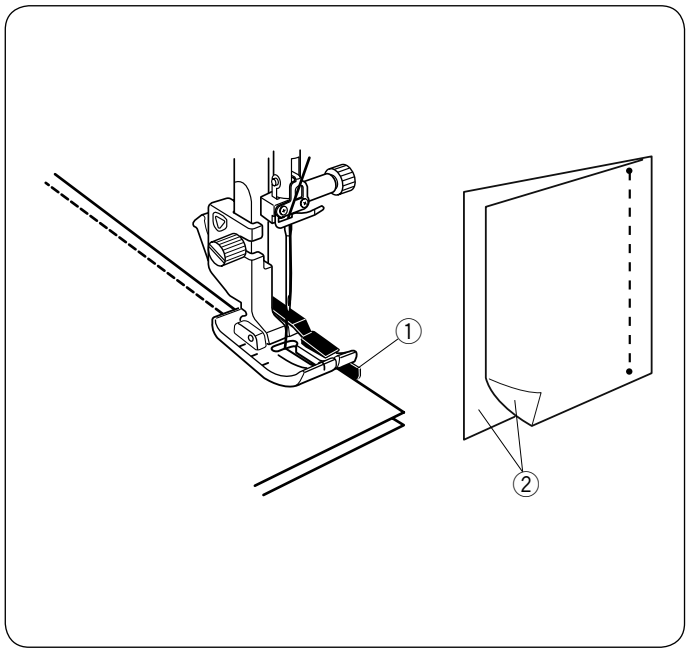

Q1-Q3 Patchwork Piecing

Patterns Q1 to Q3 are special stitches for seaming patchwork pieces.

Patterns Q2 and Q3 are for patchwork piecing with 1/4″ and 7 mm seam allowances respectively.
Use the 1/4″ seam foot O.
Place the patchwork pieces right sides together. Sew while guiding the edge of fabric along the guide.

① Guide
② Right side of the fabric

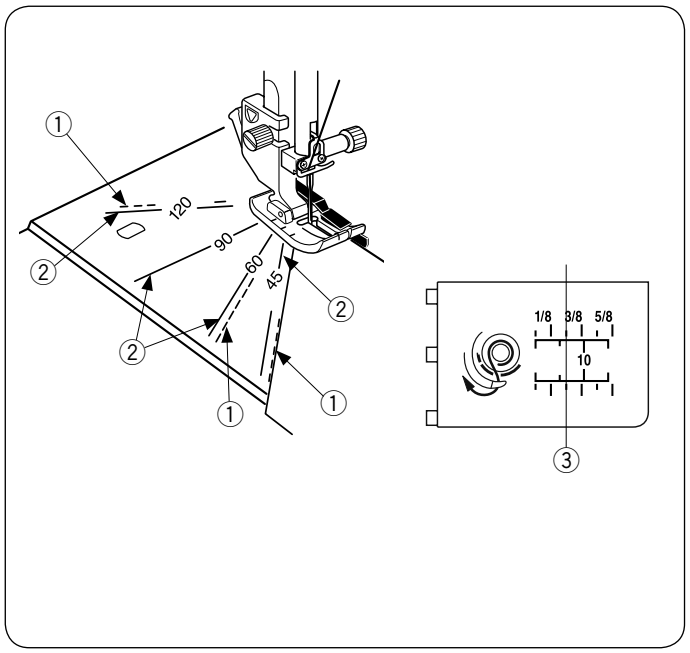

Angle Scales on the Needle Plate

You can easily seam patchwork pieces at the desired angle without marking, by using the angle scales on the needle plate.
The angle scales are marked at 45, 60, 90 and 120 degrees.
Use the broken lines when piecing the patchwork pieces with the 1/4″ seam foot O as illustrated.

① Broken line

NOTE:
Use the solid lines when piecing the patchwork pieces with the zigzag foot A. Align the edge of the fabric to the 1/4″ seam guide line.

② Solid line
③ 1/4″ seam guide line

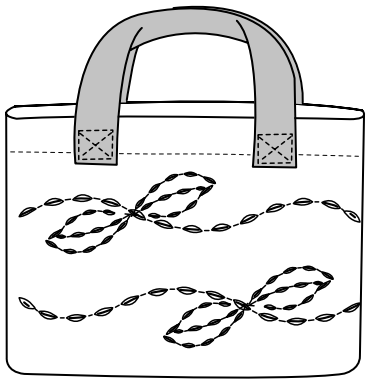

Q71-Q74 Hand-look Quilt Stitches

Patterns Q71 to Q74 are special stitches for quilting which look like hand sewn stitches.

Use a transparent nylon thread for the needle and ordinary sewing thread for the bobbin.
The bobbin thread is pulled up on the right side of the fabric and the stitches look as if they were sewn by hand.

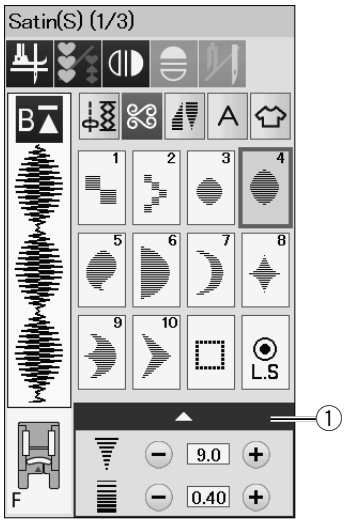

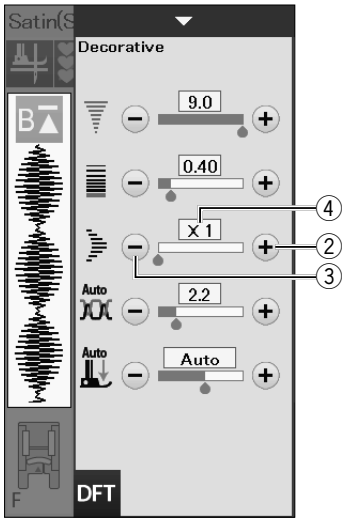

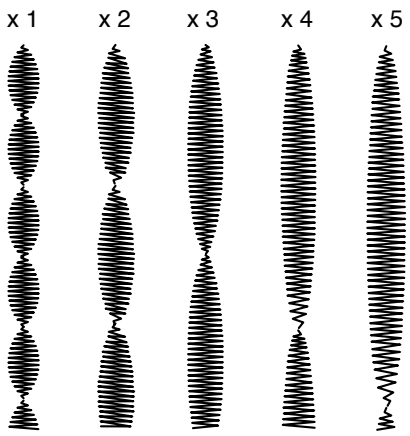

S1-S24 Decorative Satin Stitches

Elongation Ratio

Patterns S1 to S24 are decorative satin stitches for which the pattern length can be elongated without changing the stitch density.

Press the setting bar ① to expand the manual setting window.

① Setting bar

Press the “+” key to elongate the stitch pattern.

② “+” key (elongation)

To reduce the elongation ratio, press the “–” key.

③ “–” key (elongation)

The pattern can be elongated up to 5 times the original length.
The elongation ratio is indicated in the box.

④ Elongation ratio

You can also alter stitch density and stitch width.

Created Stitches (CS)

Original stitch patterns created with StitchComposer are saved in this group.

Insert the USB flash drive containing the original stitch patterns and press the open file key.

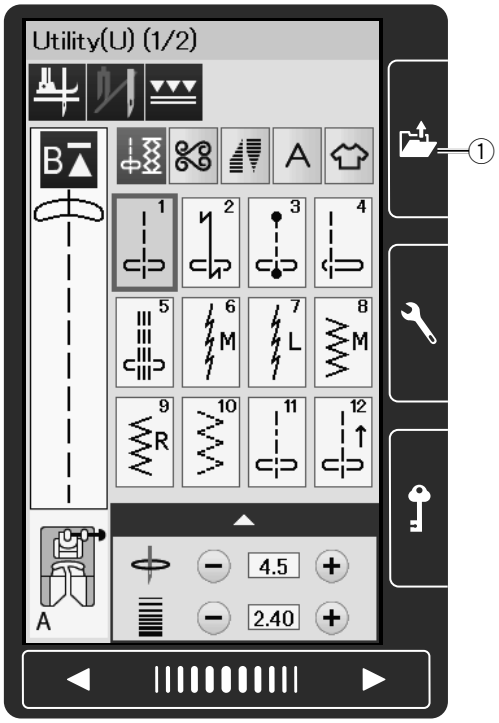

① Open file key

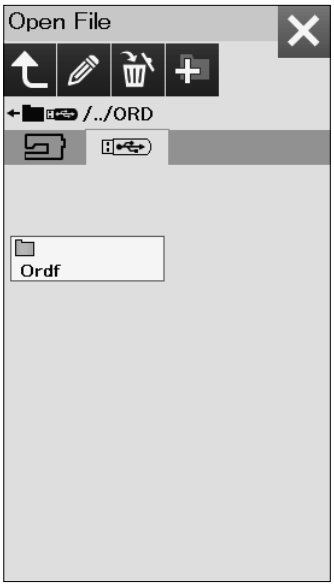

Select the USB icon and the folder list will appear. Select the desired folder to open and the file list will appear.

Select the desired file and the original stitch pattern is saved and the pattern selection key is created.

You can select, program and sew these patterns the same way as with the built-in stitch patterns.

NOTE:
- This model supports FAT16 and FAT32 formats only. If the USB flash drive is not read, check its format (refer to pages 109-110).
- Do not use a USB card reader and USB hub.

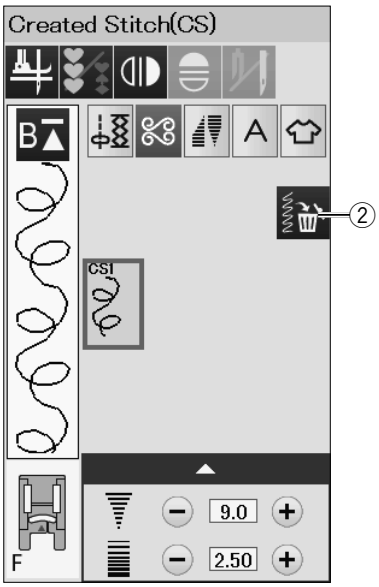

To delete the pattern, press the delete key and select the pattern to delete.

A confirmation message will appear. Press the OK key to delete the pattern.

② Delete key

NOTE:
- Up to 40 patterns can be saved in this group.
- Twin needle sewing is not available for the created stitches.

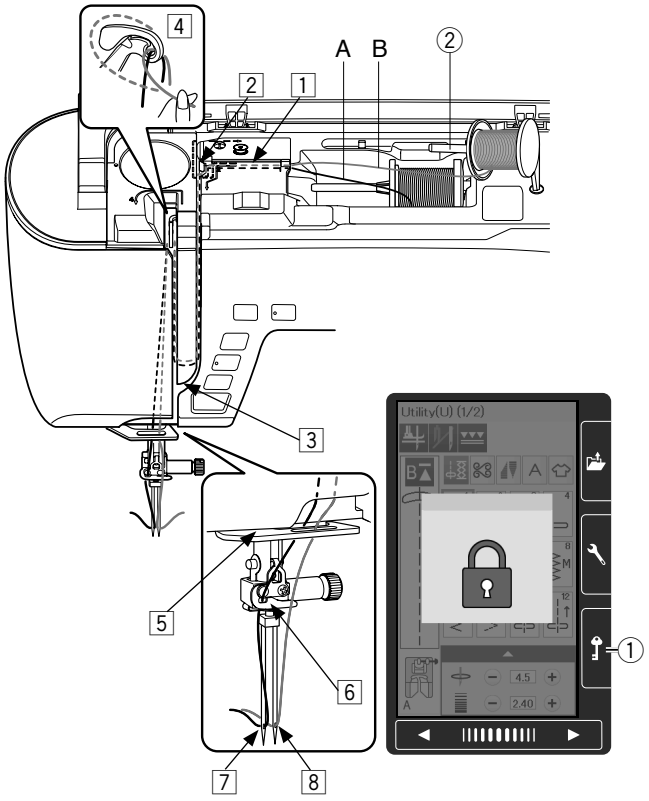

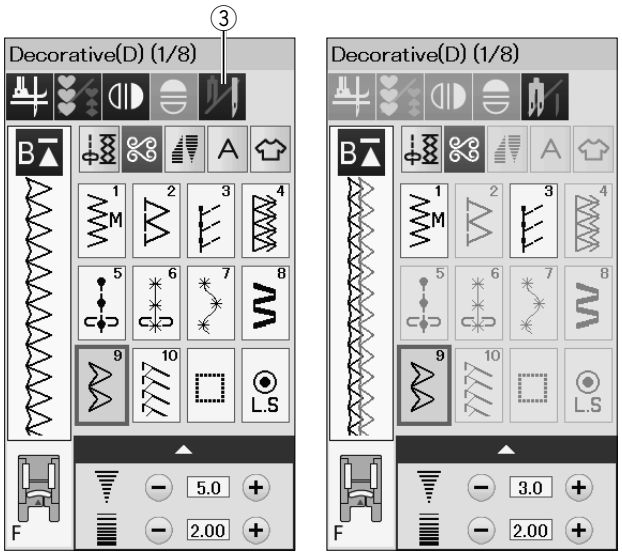

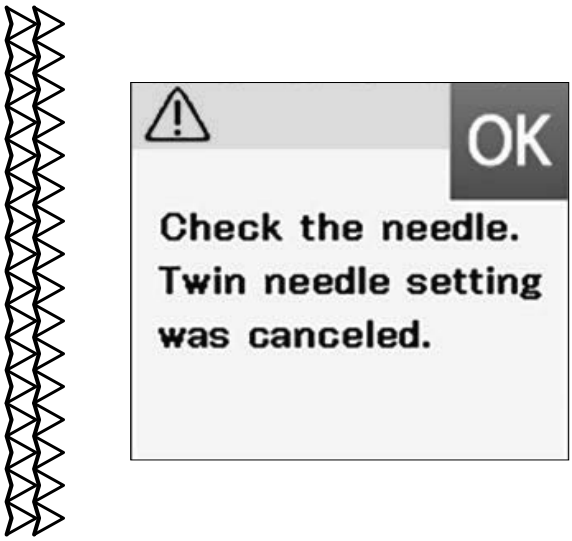

Twin Needle Sewing

Some of the utility stitches and decorative stitches can be sewn with a twin needle.

Replace the needle with the twin needle supplied with the standard accessories.

⚠ CAUTION:

Press the lockout key before changing the needle.
Do not use twin needles other than the one included in the standard accessories, otherwise the needle may hit the needle plate, foot or hook and break.

① Lockout key

Insert the extra spool pin into the hole under the top cover.
Place a spool of thread on the extra spool pin (refer to page 12).

② Extra spool pin

Draw both threads from the spools and pass them through the threading points from 1 to 4.
Slip the thread A through the needle bar thread guide 5, then pass through points 6 and 7 as illustrated.
Thread the thread B through the front hole of needle bar thread guide 5, then pass it through the needle hole 8.

Make sure that the two strands of thread from the spools do not get tangled.

NOTE:

- Threading from points 1 to 4 is the same as for a single needle (refer to page 15).
- The needle threader cannot be used with the twin needle.

Press the twin needle key and select the desired pattern.
Patterns not suitable for twin needle sewing cannot be selected (pattern selection keys are grayed out).
Buttonholes, specialty stitches and monogram cannot be selected.

③ Twin needle key

NOTE:

- When you sew patterns with the twin needle, test the stitches first before you sew on the garment.
- Use the zigzag foot A or satin stitch foot F for twin needle sewing.
- Use the threads #60 or finer.
- When changing the sewing direction, raise the needle and presser foot then turn the fabric (foot up for pivoting option is not available when the twin needle is selected).
- Use the thread cutter on the face cover when cutting threads.

After twin needle sewing is finished, press the twin needle key and the warning message will appear.

Press the OK key and replace the twin needle with a single needle.

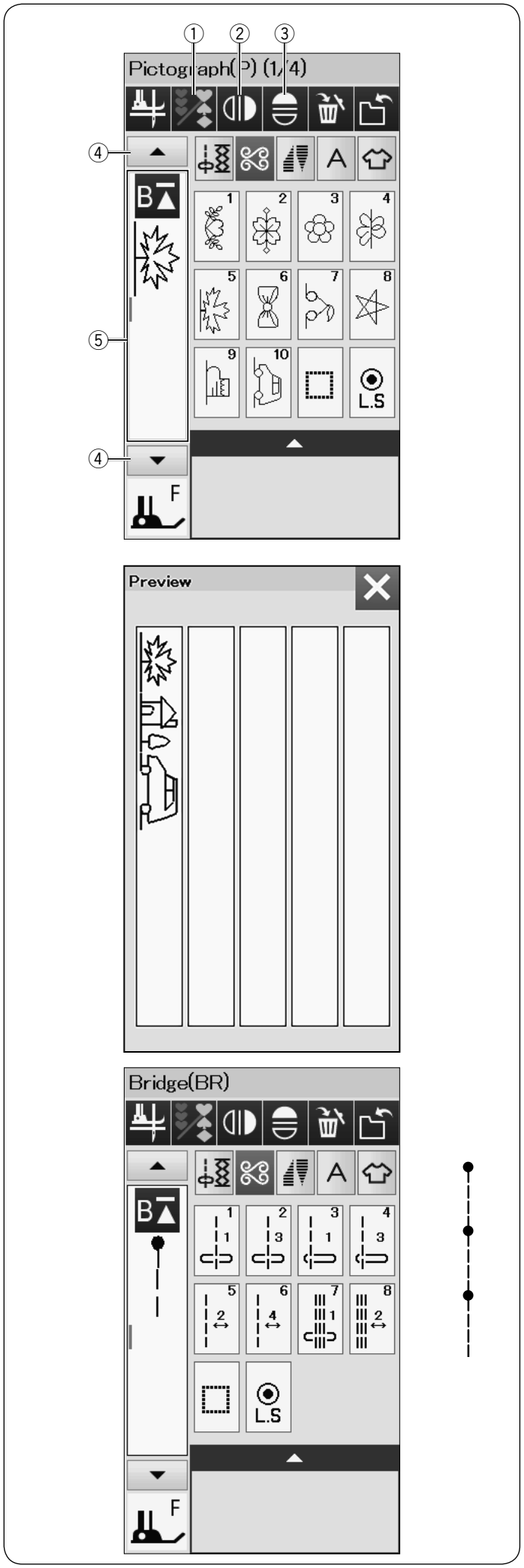

PROGRAMMING A PATTERN COMBINATION

The patterns in the decorative stitch category and monograms can be programmed to make a pattern combination.

Press the program key and select as many patterns as you wish to program.
You can program up to 100 patterns in each combination.
The images of programmed patterns are shown on the left side of the visual touch screen.

① Program key

Mirror Image of Patterns

To sew or program the pattern as a mirror image, press the vertical mirror key or horizontal mirror key.
Select the desired patterns to create the mirror image.
Press the vertical or horizontal mirror key again to cancel the mirror image function.

② Vertical mirror key
③ Horizontal mirror key

To view the entire pattern combination, press the cursor key to scroll over the pattern combination or press the edit box to show the entire pattern combination at a glance.

④ Cursor keys
⑤ Edit box

NOTE:
Horizontal mirror image is available only for the specific patterns. For pattern identification, these patterns are shaded in light grey on the reference chart inside the top cover.

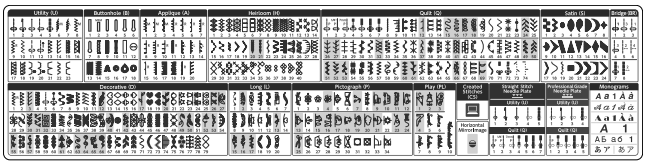

Mirror image function will be canceled and mirror image icon will disappear if the selected pattern is not suitable for the mirror image.

NOTE:
Presser foot pressure cannot be adjusted to the stitch patterns of a pattern combination individually.
If you attempt to do so, only the last pattern's presser foot pressure settings are applied to all the programmed patterns.

Bridge Stitches

Bridge stitches are used for inserting straight stitches after a stitch pattern.
If you want more space between French knots (D5), for example, insert pattern BR5 after pattern D5.
Two counts of straight stitches are added to pattern D5.

NOTE:
Patterns BR5, BR6 and BR8 will inherit the stitch length and needle drop position of the previous pattern in the pattern combination.

Editing a Pattern Combination

Deleting a Pattern

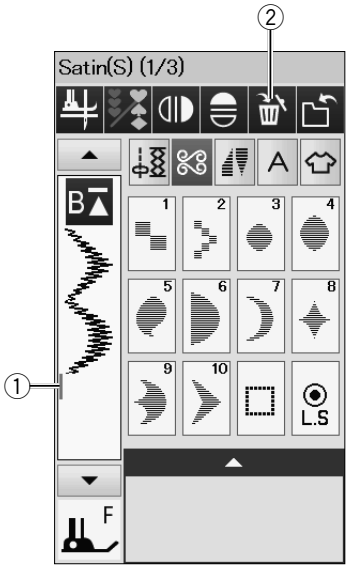

The pattern before the cursor or shown in blue is deleted by pressing the delete key.

① Cursor
② Delete key

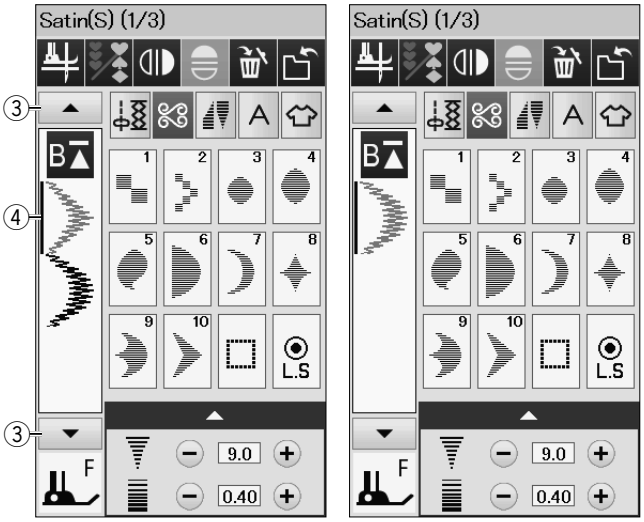

To delete a pattern in the middle of a combination, press the cursor key to select the pattern you wish to delete. The stitch image of the selected pattern turns blue. Press the delete key to delete the selected pattern.

③ Cursor key
④ Selected pattern

Inserting a Pattern

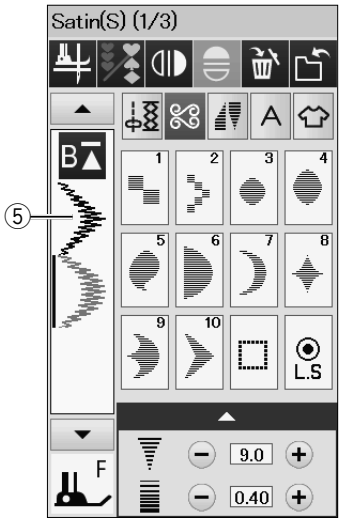

Press the cursor key to select the pattern next to where you wish to insert a pattern. Enter the desired pattern to insert it before the selected pattern.

⑤ Inserted pattern

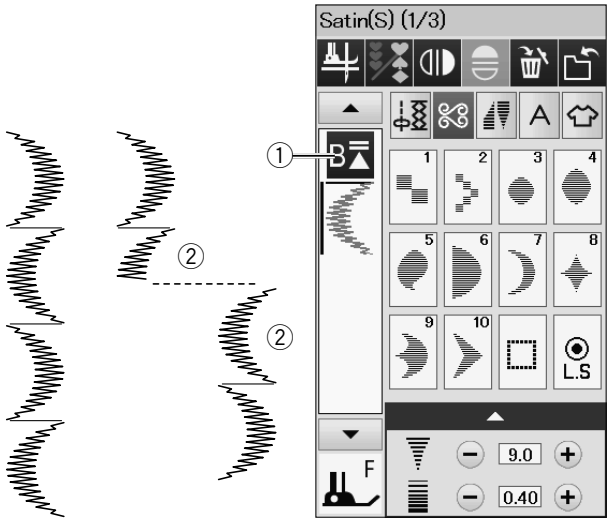

Startover Key

This is a 2-way function key to start sewing a pattern combination over from the beginning.

When you stop sewing a pattern combination, the startover key is activated.

Current pattern startover

If you wish to start sewing from the beginning of the current pattern, press the startover key once and start the machine. The key will change and show a triangle and double bar that means the machine will start over from the current pattern of the combination.

① Startover key (current pattern of the combination)
② Current pattern

NOTE:
When you stop sewing a pattern combination during the first pattern and press the startover key, the number of the bar above the triangle will not change because the pattern will be sewn from the first pattern.

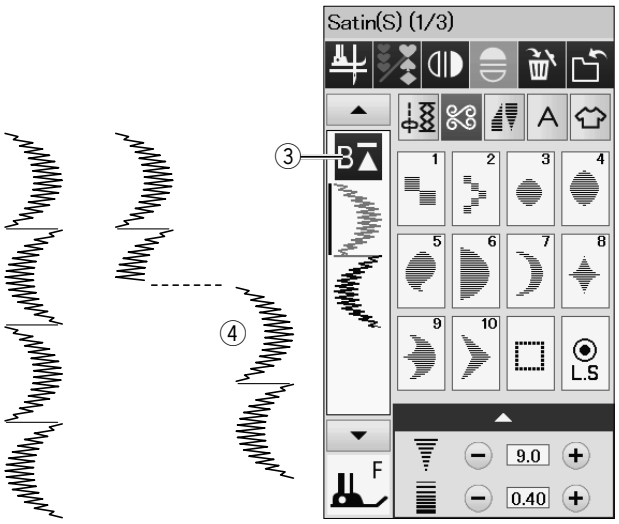

First pattern startover

The key shows a triangle and single bar that means the machine will start over from the first pattern.
If you wish to start sewing from the beginning of the first pattern of the combination, press the startover key twice and start the machine.

③ Startover key (first pattern of the combination)
④ First pattern

NOTE:
If auto thread cutting is done, the machine will startover from the first pattern.

Checking Pattern Combination Length

You can check the total length of the pattern combination by pressing on the pattern combination length key indicated in the manual setting window.
Press the setting bar to open the manual setting window.

① Setting bar
② Pattern combination length key

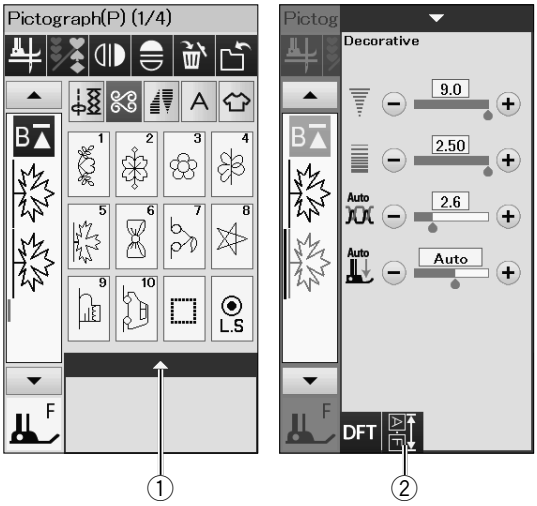

The readout of the total length is a theoretical value and the actual length may vary depending on sewing conditions.

For example, select the pattern P5 three times, and sew a pattern combination.
If the actual length differs considerably from the readout, measure the actual length and enter the nearest value by pressing the “+” or “–” key.
In this case, the theoretical value is 51 mm. However, if the actual length ③ is 40 mm, enter 40 mm by pressing “–” key. Press the OK to register it.

③ Actual length

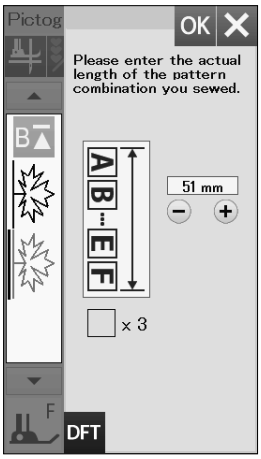

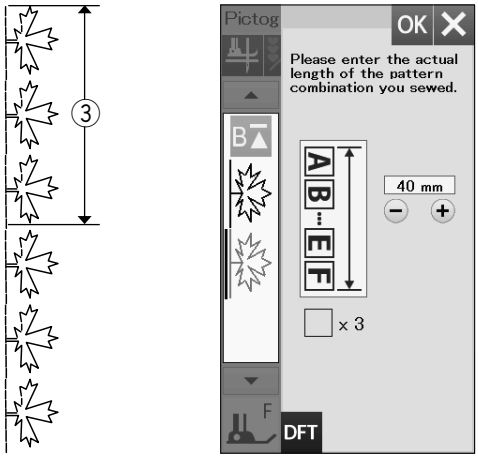

The readout is adjusted automatically when calculating the length of other pattern combinations.
The message “Please enter the actual length of the pattern combination” disappears to indicate that the displayed value is adjusted already.
For example select patterns P10, P15 and P5.
The theoretical value is 53 mm. However, the read out is calculated according to the measured actual length. In this case, the adjusted value is 42 mm.
Press the default key to clear the entered actual length.

④ Default key

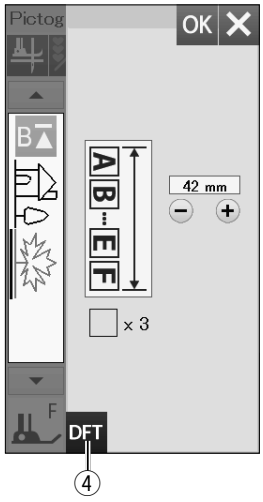

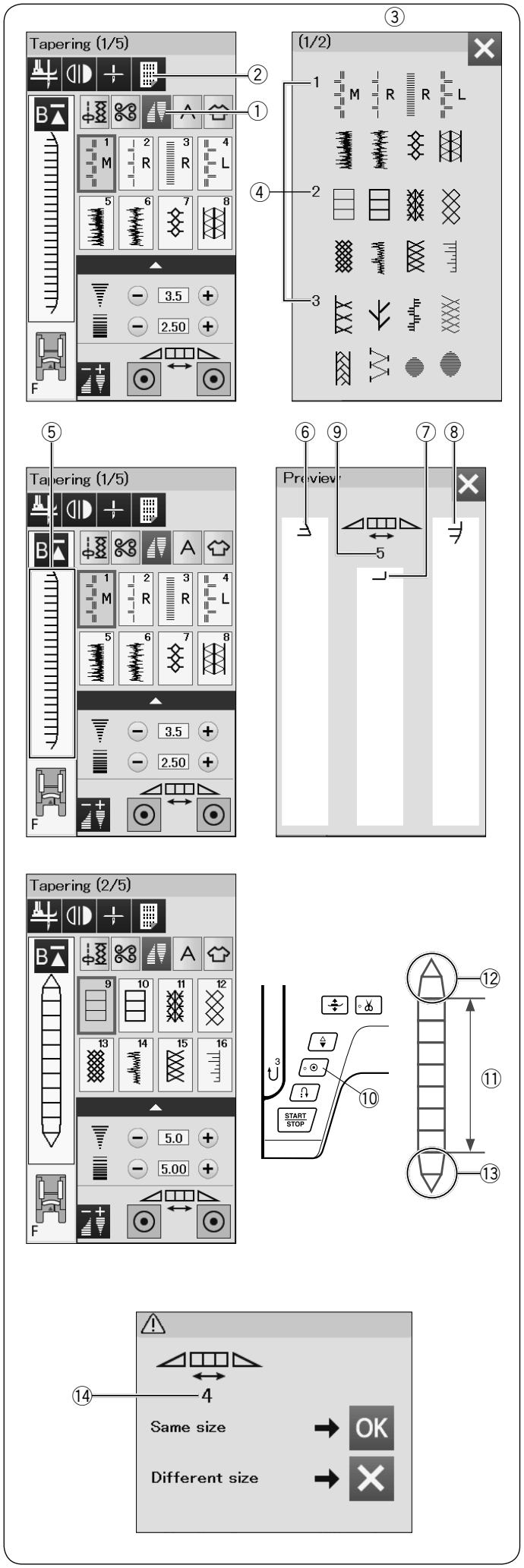

Tapering

You can taper the beginning and end of the decorative stitch patterns to create tapered corners and points. Press the tapering icon key to enter the tapering mode (refer to page 25).

① Tapering icon key

NOTE:
- The tapering length varies depending on the stitch pattern and its tapering shape. Make a test stitch on an extra piece of the fabric to check the tapering length.
- If you stop the machine while sewing, and change the stitch width, center needle position or stitch length, the machine will start tapered sewing from the beginning.

Stitch reference chart for tapering

Press the stitch reference key to show the stitch reference chart for the tapering.

② Stitch reference key
③ Stitch reference chart for tapering
④ Page number

Preview

Press the edit box to preview the selected tapering stitch.
The left column shows the start tapering pattern ⑥.
The center column shows the pattern body ⑦.
The right column shows the end tapering pattern ⑧.

⑤ Edit box
⑥ Start tapering pattern
⑦ Pattern body
⑧ End tapering pattern

When the size of the tapering stitch is set, the number of the pattern body to be sewn appears above the center column.

⑨ Number of body patterns

Tapered stitch sample 1

Example: To sew the tapered stitch pattern #9
Select the stitch pattern #9.
Start the machine. The machine sews the start tapering pattern and pattern body.
Sew to the required length, then press the auto-lock button. The machine sews the end tapering pattern and stops.

⑩ Auto-lock button
⑪ Required length
⑫ Start tapering pattern
⑬ End tapering pattern

To sew the same sized tapered pattern

When finished sewing, a confirmation message will appear. The number shown indicates the number of the body patterns.

⑭ Number of the body pattern

Press OK and simply start the machine to sew another tapered pattern of the same size.

To sew the same tapered pattern in a different size, press the X key.

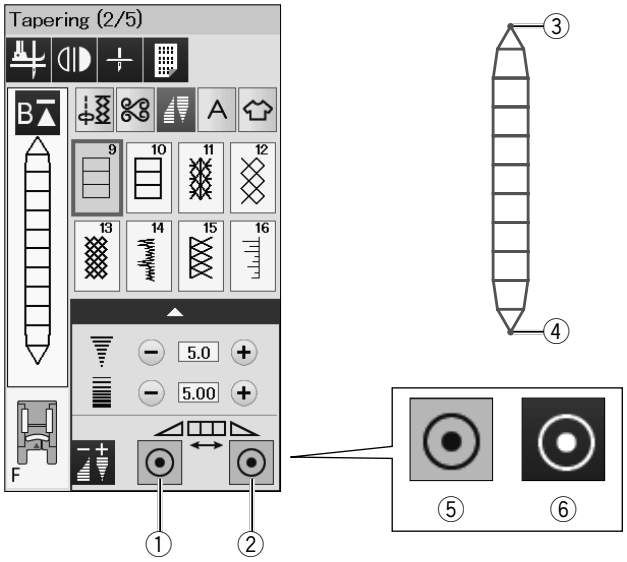

Auto-lock stitch function

The machine sews auto-lock stitch at the beginning and end of the sewing with the default settings.
However, you can turn on or off the auto-lock stitches by pressing the corresponding auto-lock keys on the visual touch screen.

① Initial lock stitch key
② End lock stitch key
③ Initial lock stitch
④ End lock stitch
⑤ Lock stitch key (ON)
⑥ Lock stitch key (OFF)

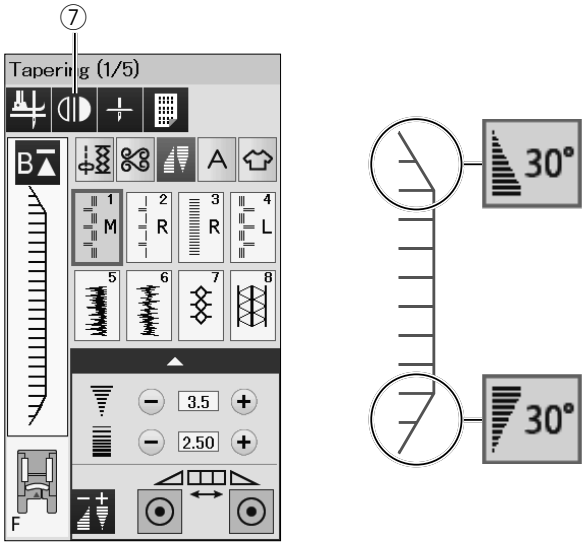

Flipping the tapered pattern 1

Press the static flip key to flip the tapered pattern vertically without flipping its start and end tapering degree angle.

⑦ Static flip key

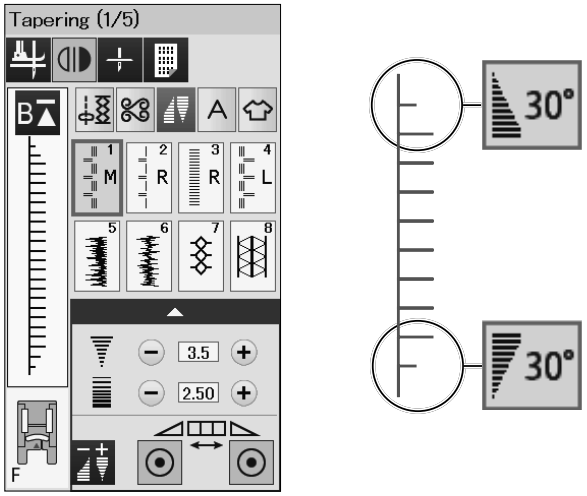

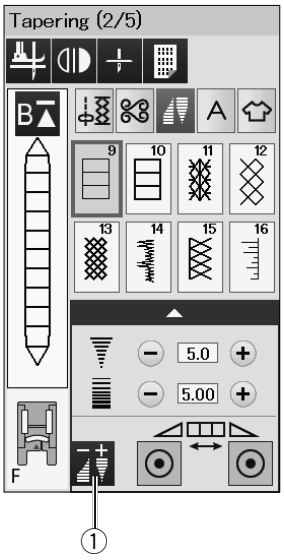

Adjustment of tapered stitches

You can adjust the shape of the tapered stitch pattern.
Press the tapering adjustment key.
The dialog box will open.

① Tapering adjustment key

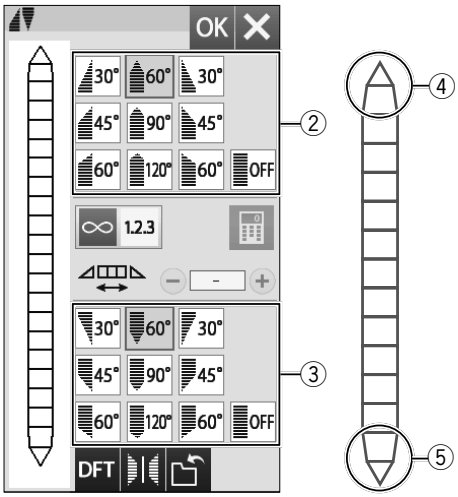

Tapering shape

Select the shape of the tapering for the beginning and the end of the stitch patterns by pressing the tapering shape keys.

The keys on the top ② are for start tapering pattern ④.
The keys on the bottom ③ are for end tapering pattern ⑤.

② Tapering shape keys (for start tapering pattern)
③ Tapering shape keys (for end tapering pattern)

The numbers in the tapering shape keys indicate the degree of tapering. You can apply the tapering alignment from left, center, right or off. The start and end of the stitch patterns can be aligned separately.

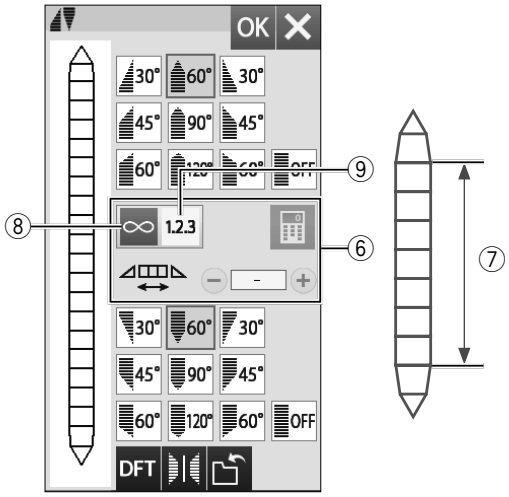

Pattern body length

The keys on the middle ⑥ are for pattern body length ⑦.
The machine sews the pattern body as long as the auto-lock key is pressed when the free length key ⑧ is turned on. However, you can set the number of the pattern body to be sewn by pressing the pattern length key ⑨.

⑦ Pattern body
⑧ Free length key
⑨ Pattern length key

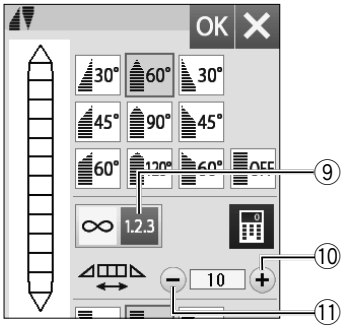

Press the pattern length key.
Press the “+” ⑩ or “–” ⑪ key to set the number to repeat the pattern body.

⑨ Pattern length key

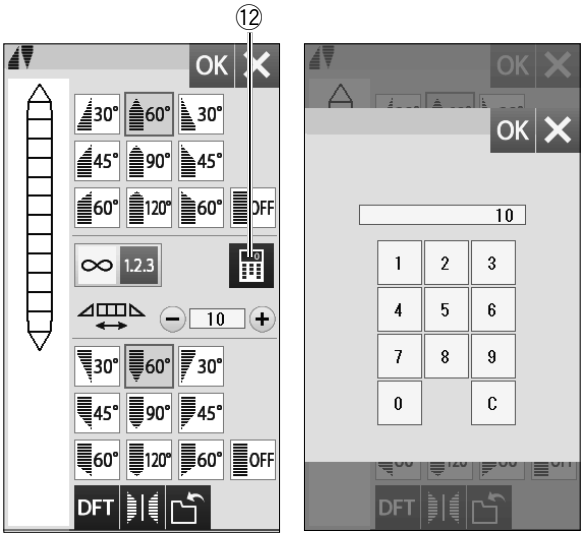

You can also set the number to repeat the pattern body by pressing the numeric pad key.
Press the numeric pad key and the numeric keypad window will open.
Enter the desired pattern length and press the OK key.

⑫ Numeric pad key

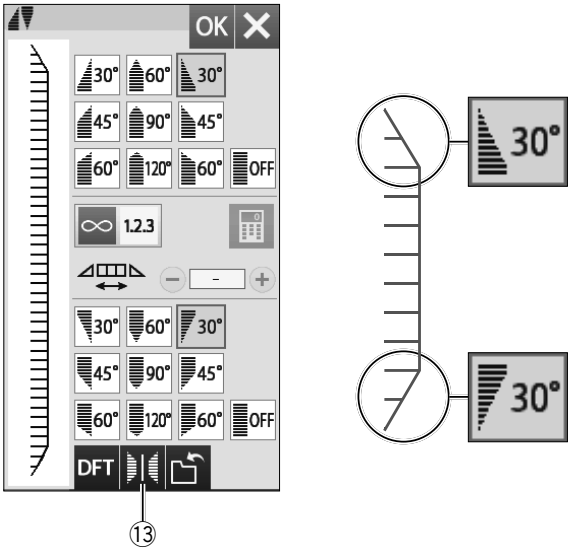

Flipping the tapered pattern 2
Press the mirror image key to flip the tapered pattern vertically.

⑬ Mirror image key

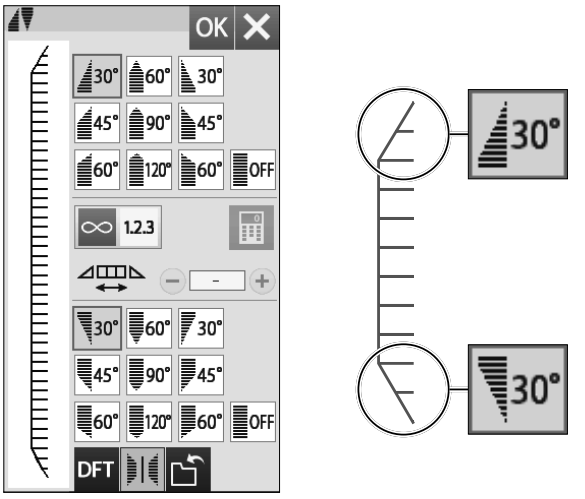

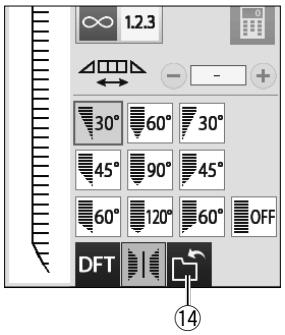

Saving tapered stitches
The customized tapered patterns can be saved as a file in the machine's internal memory or a USB flash drive.

Press the save file key after customizing a tapered stitch. The tapered stitch file is saved as a *.JCS file. To save or open the file refer to page 76-77.

⑭ Save file key

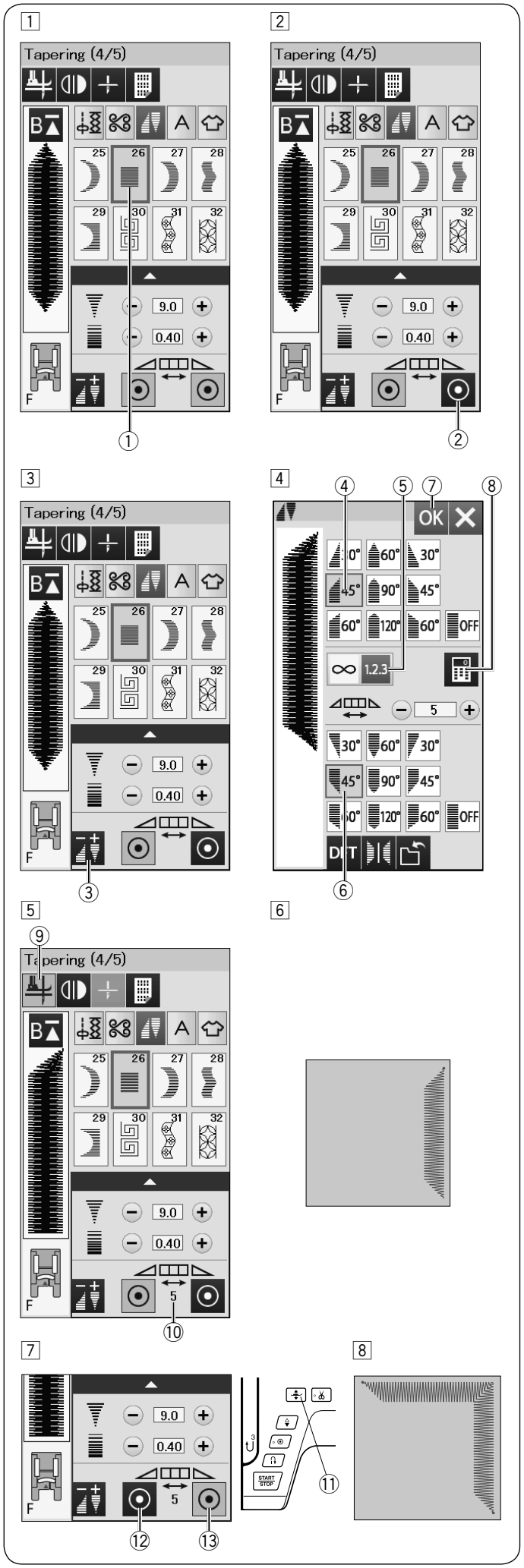

Tapered stitch sample 2

Example: To create a corner frame with the tapered stitch pattern #26

1 Select the stitch pattern #26 ①.

2 Press the end lock stitch key ② to turn off the end lock stitch.

3 Press the tapering adjustment key ③.

4 Press the tapering shape key ④.
Press the tapering shape key ⑥.
Press the pattern length key ⑤.
Press the "+" key 4 times, or press the numeric pad key ⑧ and enter "5".
Press the OK key ⑦.

5 Press the foot-up key ⑨.

⑩ Number of the body pattern

6 Lower the needle into the fabric at the point where you want to start sewing.

Start sewing. Sew until the machine stops.
The machine stops and the presser foot rises automatically.

7 Pivot the fabric 90 degrees.

Press the foot lifter button ⑪ to lower the presser foot.
Press the initial and end lock keys.
Be sure that the initial lock key is turned off ⑫, and the end lock key is turned on ⑬.

Start sewing in the new direction.

8 The machine automatically stops at the end of the corner with the lock stitch.

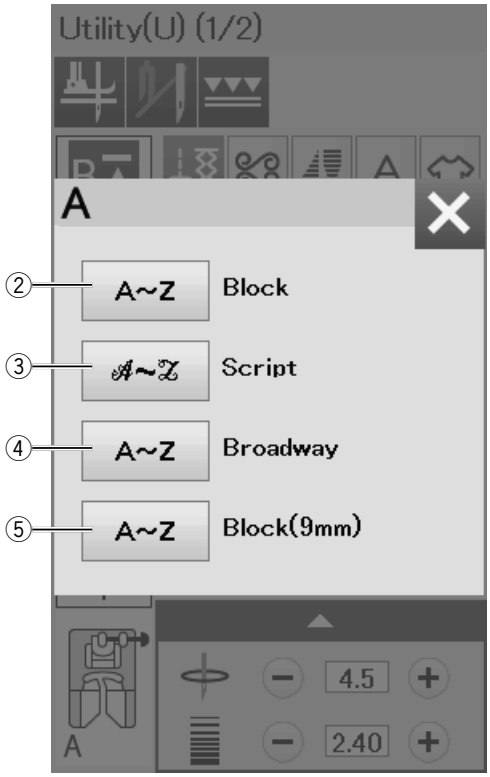

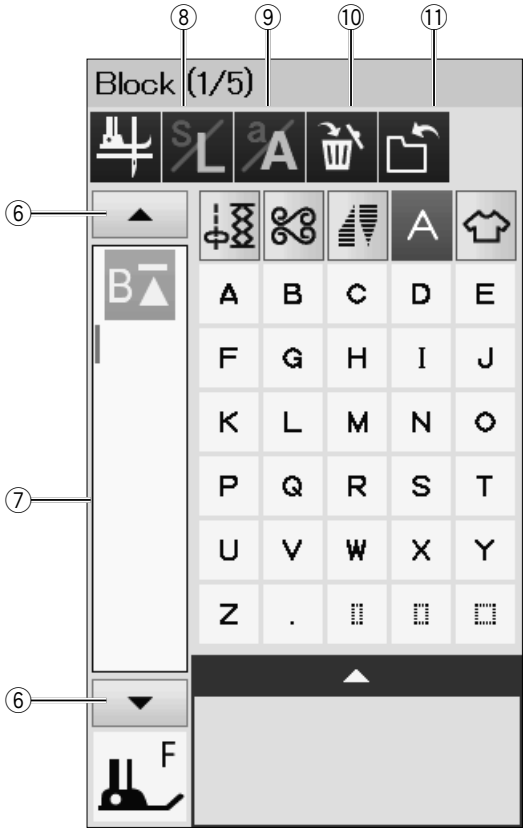

MONOGRAMMING

You can program letters and symbol designs for monogramming.
Press the Monogram key and the font selection window will open.
You can select one of 4 fonts*.
Select the desired font by pressing the corresponding key.

① Monogram key
② Block font key
③ Script font key
④ Broadway font key
⑤ Block font (9 mm) key

The monogram mode window will open.

NOTE:
- The height of Block font (9 mm) is approximately 9 mm.

* If you select Russian or Japanese language for the visual touch screen, you can select Cyrillic alphabets or Japanese font as well.

Function Keys

⑥ **Cursor key**

Press this key to move the cursor up or down.

⑦ **Edit box**

Press the edit box to view the entire monogram.

⑧ **Letter size key**

Press this key to select the full size (L) or small size (S).

⑨ **Letter case key**

Press this key to select the upper case or lower case.

⑩ **Delete key**

Press this key to delete the selected character or symbol.

⑪ **File save key**

Press this key to save the monogram as a data file.

NOTE:
Numbers, symbols and European letters are available on pages 2/5 through 5/5.

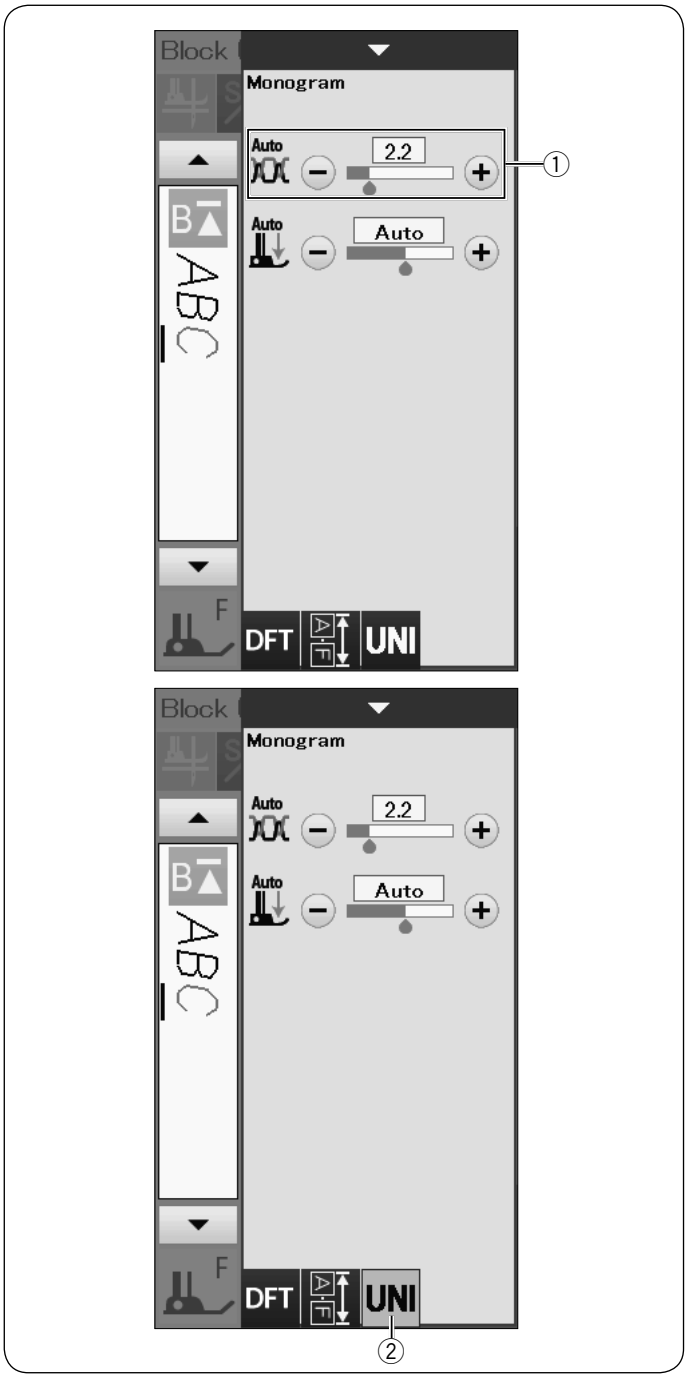

Manual Thread Tension

This machine is equipped with automatic thread tension control. However, you may need to manually adjust the tension balance depending on the sewing conditions.

To adjust the thread tension, press the setting bar to show the option.

Individual Thread Tension Adjustment

To apply the thread tension adjustment to each letter individually, select the letter by moving the cursor.

Press “+” or “–” to adjust the thread tension of the selected letter. The adjusted thread tension is applied to the selected letter.

① Thread tension adjustment

Unified Thread Tension Adjustment

To apply the thread tension adjustment to all letters together, you do not need to select the letters.

Press the unified thread tension key ②.
Press “+” or “–” to adjust the thread tension.
The adjusted thread tension is applied to all entered letters.

When unified thread tension control is applied, the unified thread tension key turns to yellow.
Press the unified thread tension key again to deactivate the unified thread tension adjustment.

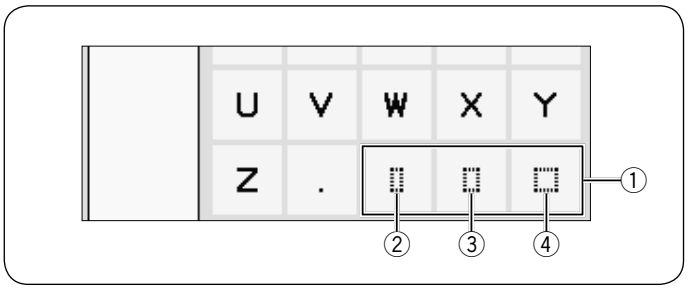

Spacing

To enter a space in monogramming, press one of the three space keys on the lower right corner of the monogram selection.

① Space keys
② Small-size space
③ Medium-size space
④ Large-size space

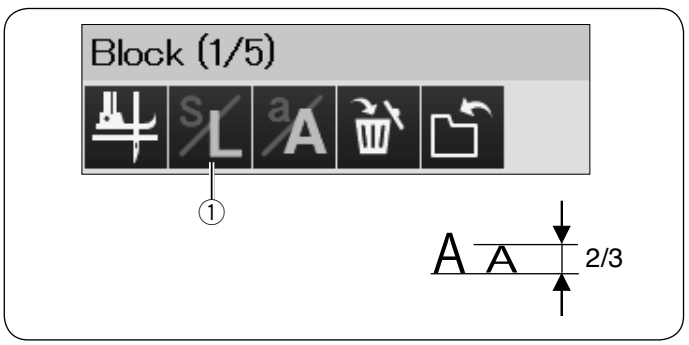

Reducing the Size of Letters

To reduce the height of a character to approximately 2/3 of its original size, select the character and press the letter size key ①.

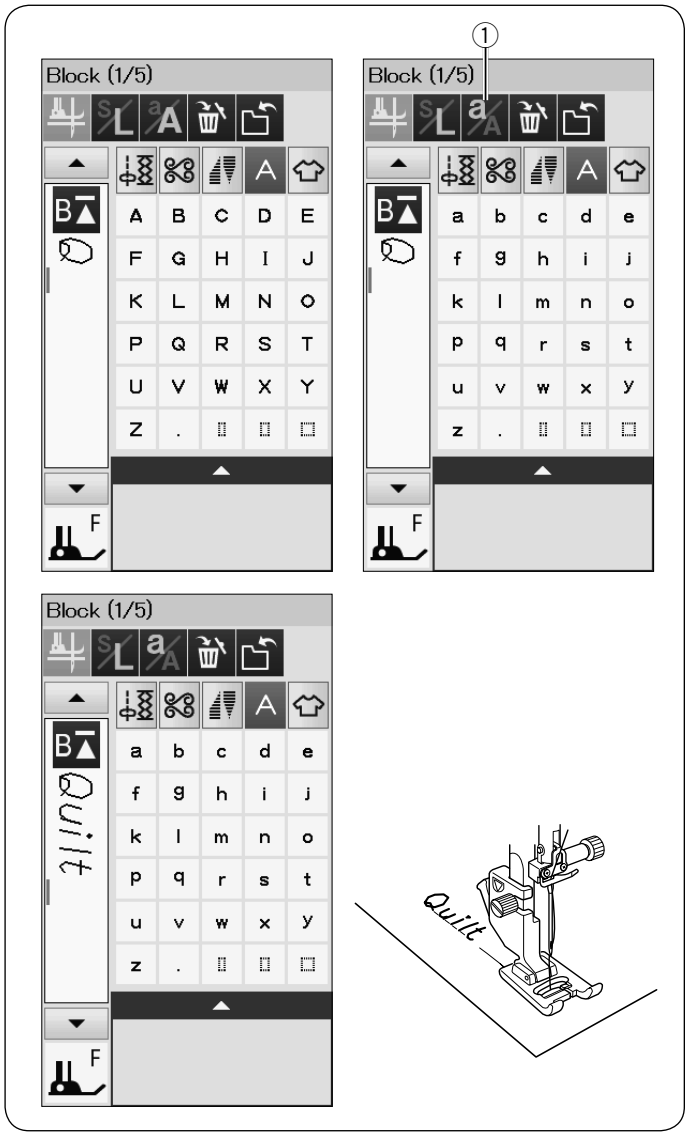

Programming a Monogram

Simply enter the characters by pressing the corresponding keys to program a monogram.

Example 1: “Quilt” in Block font

Select Block font. Enter “Q”.

Press the letter case key ① to select lower case.

① Letter case key

Enter “u”, “i”, “l” and “t”.

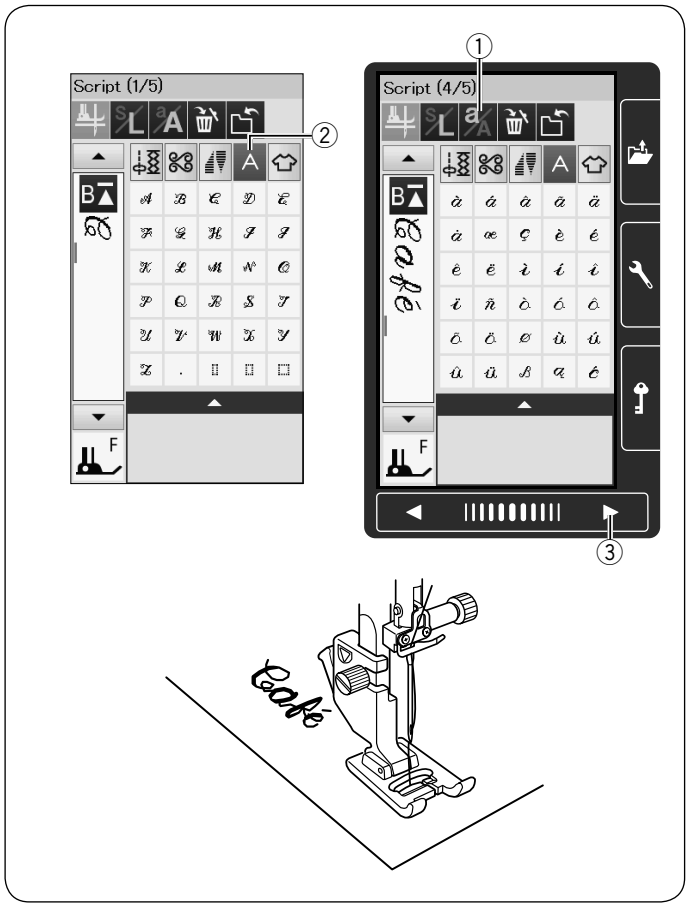

Example 2: “Café” in Script font

Press the monogram key and select Script font.
Enter “C”.

② Monogram key

Press the letter case key ① and select lower case letters.
Enter “a” and “f”.

Press the page key ③ 3 times to go to the page 4 of 5.
Press the letter case key. Enter “é”.

NOTE:
Use a blue tip needle for sewing a monogram.
Apply a sheet of stabilizer to fine fabrics or stretch fabrics.
Test sew to check the sewing results.

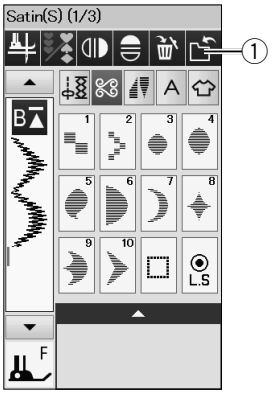

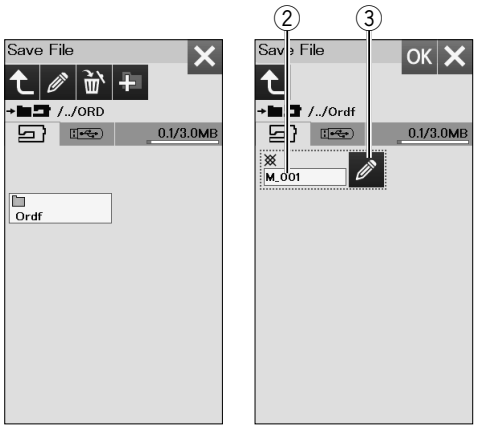

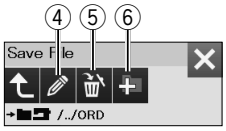

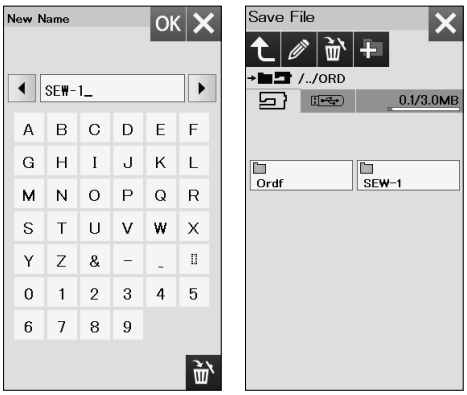

Saving a Pattern Combination

The pattern combination and monogram can be saved as a file in the machine's internal memory or a USB flash drive.

The machine has a USB port for USB flash drive.

Press the save file key after programming a pattern combination, and the save file window will open.

① Save file key

Select the location to where you wish to save the pattern combination.
The "Ordf" folder is shown.

Select the "Ordf" folder and the file name is assigned automatically starting from M_001.....in order.
The file name is assigned starting from C_001.....when saving tapered stitches.
Press the OK key to save the file under the assigned name.

② File name

If you wish to assign a unique name to the file, press the rename key and the keyboard window will open.

③ Rename key

Enter a new name and press the OK key to change the file name.
Press the OK key and the file is saved under the new name.

NOTE:

- The files and folders are displayed on different pages.
- This model supports FAT16 and FAT32 formats only. If the USB flash drive is not read, check its format (refer to pages 109-110).
- Do not use a USB card reader and USB hub.

Changing the folder name or file name

Press the rename key and select the folder or file of which you wish to change its name. The keyboard window will open.
Enter the new name and press the OK key.
The name of the folder or file will change.

④ Rename key

Deleting a file or folder

Press the delete key and select the file or folder to delete.
A confirmation message appears.
Press the OK key to delete the file or folder.

⑤ Delete key

Creating a new folder

Select a location for a new folder and press the new folder key. The keyboard window will open.
Enter a folder name and press the OK key.
The new folder is created under the assigned name.

⑥ New folder key

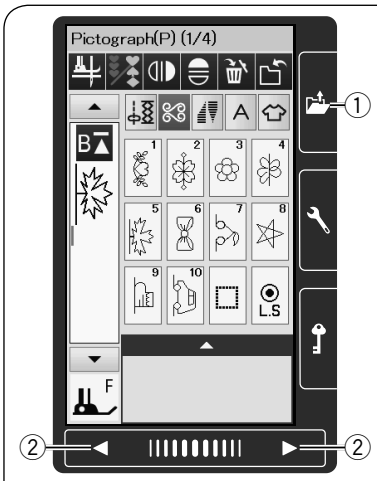

Opening a Pattern Combination

You can open the pattern combination and monogram saved in the machine's internal memory or a USB flash drive.

Press the open file key and the open file window will open.

① Open file key

Select the memory location; either the machine's internal memory or a USB flash drive.
The "Ordf" folder will appear.

NOTE:

- If you created any folders before, those folders will also appear.
- If you cannot find the desired folder or the file in the page, press the next or previous page key ② to display the other pages.

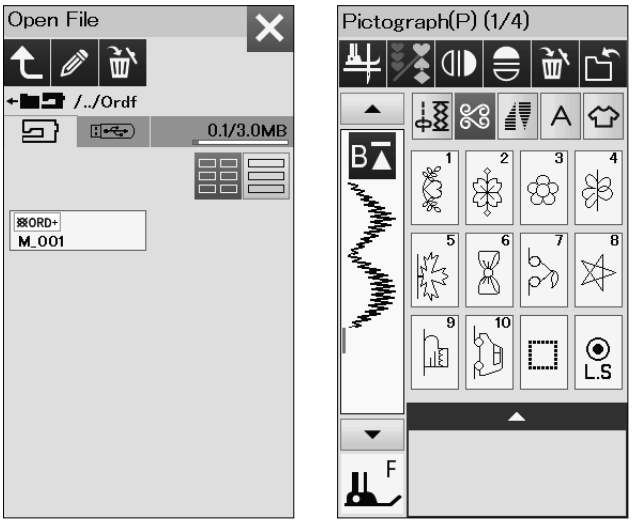

Select the desired folder and the file list will appear.
Select the desired file.

The screen will return to the ordinary sewing window showing the saved pattern combination or monogram.

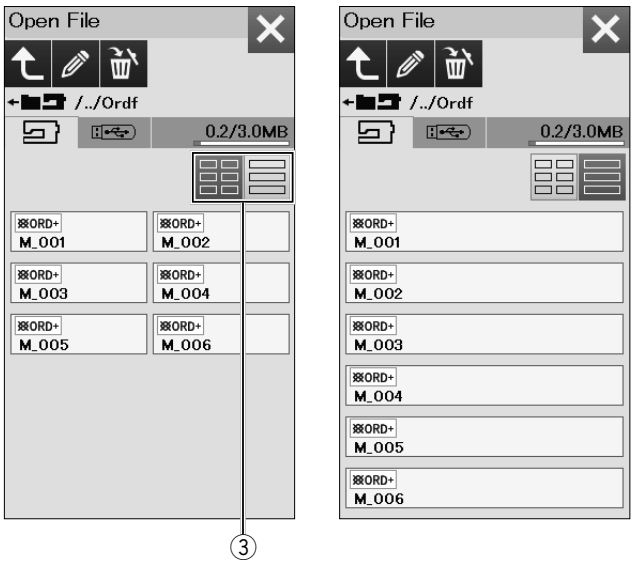

Press one of the layout keys ③ to select the layout of the file list as shown.

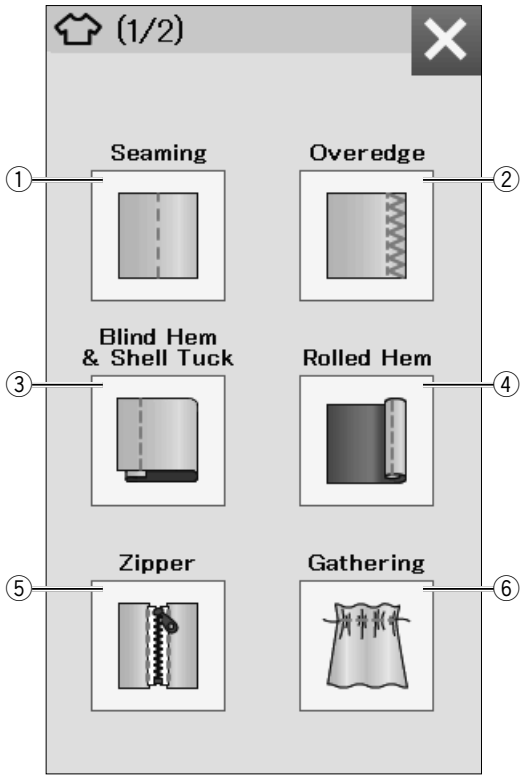

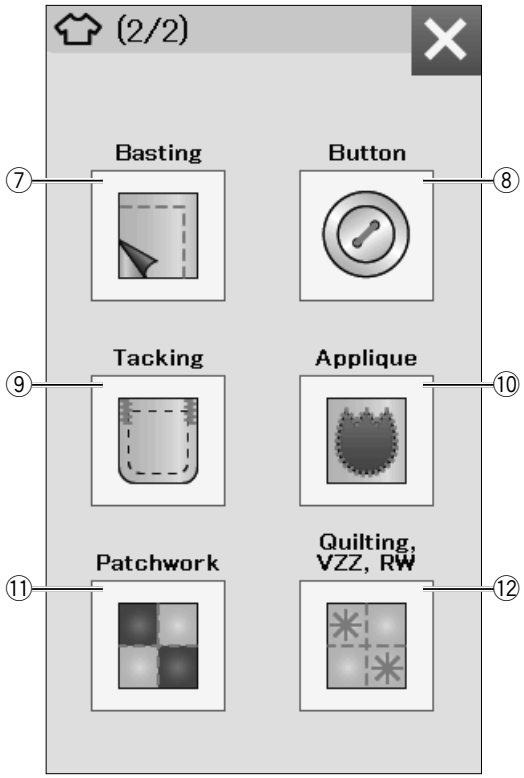

SEWING APPLICATION

Sewing Application

Sewing application is a unique feature that provides you with 12 useful sewing applications.

Press the sewing application key and the sewing application menu will open.

The 12 sewing applications are as follows:

① Seaming
② Overedge
③ Blind Hem & Shell Tuck
④ Rolled Hem
⑤ Zipper Sewing
⑥ Gathering
⑦ Basting
⑧ Button Sewing
⑨ Tacking
⑩ Applique
⑪ Patchwork
⑫ Quilting, Variable Zigzag, Ruler Work

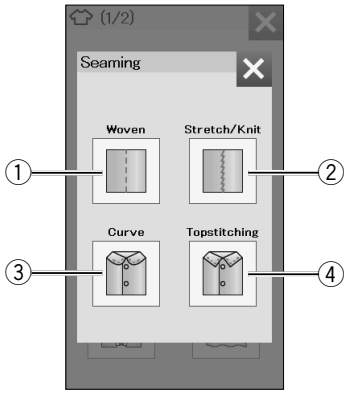

Seaming

There are 4 types of stitches for seaming in this group.

①

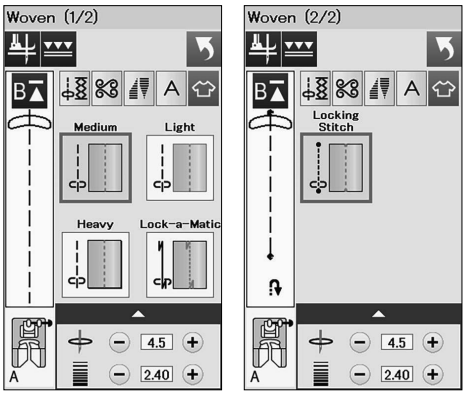

① Woven

Straight stitches for seaming regular woven fabrics.

②

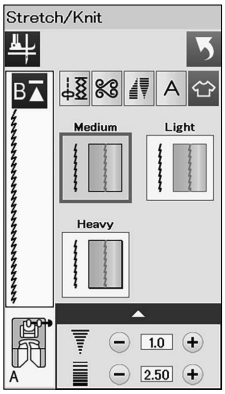

② Stretch/Knit

Narrow stretch stitches for seaming stretch or knit fabrics.

③

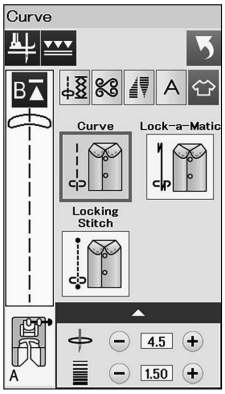

③ Curve

Short straight stitches for seaming curved line.

④

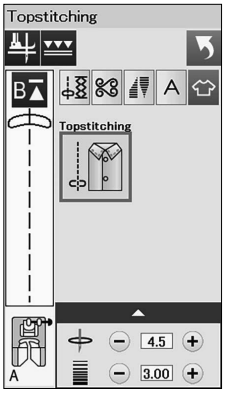

④ Topstitching

Long straight stitch for topstitching with thick threads.

Overedge

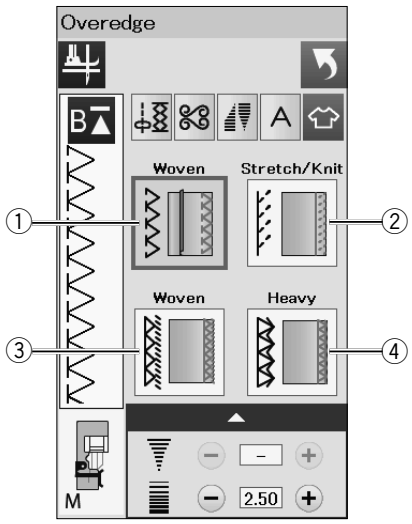

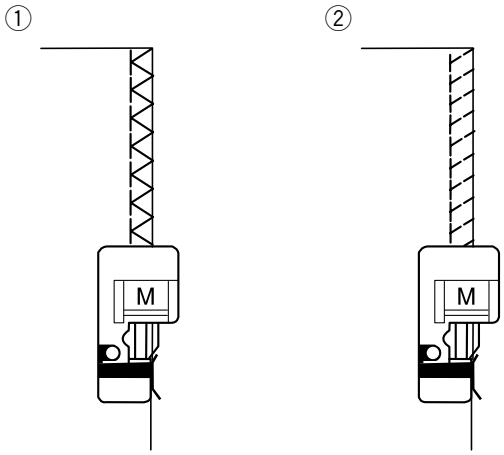

① **Woven**

Overcasting stitch for regular woven fabrics.

② **Stretch/Knit**

Knit stitch for finishing raw edges of stretch or knit fabrics.

For better results, use the zigzag foot A and sew leaving an adequate seam allowance.

After sewing, trim the seam allowance close to the stitches (refer to page 34).

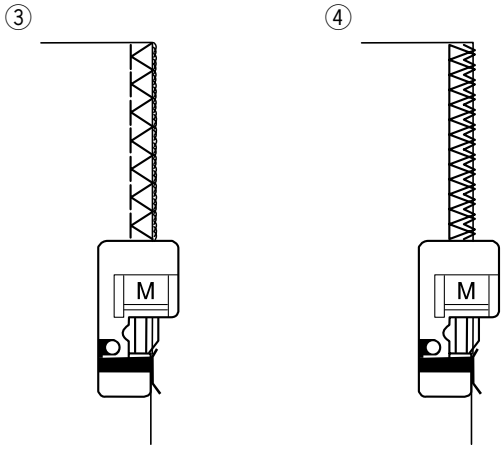

③ **Woven**

Overlock stitch similar to a professional overlocker stitch.

④ **Heavy**

Double overedge stitch for preventing raw edges of linens and gabardines from raveling.

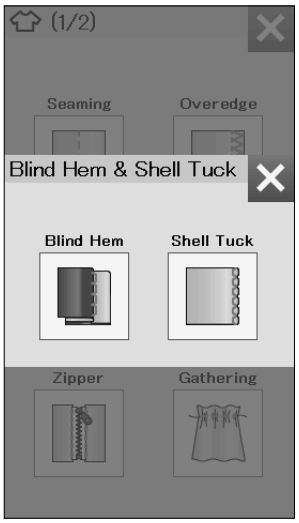

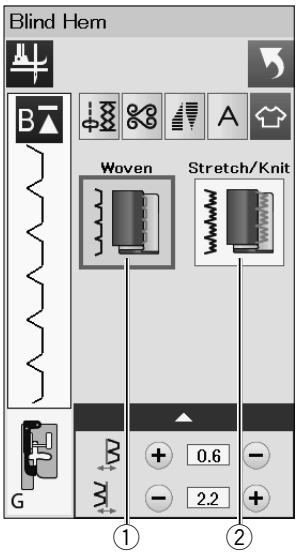

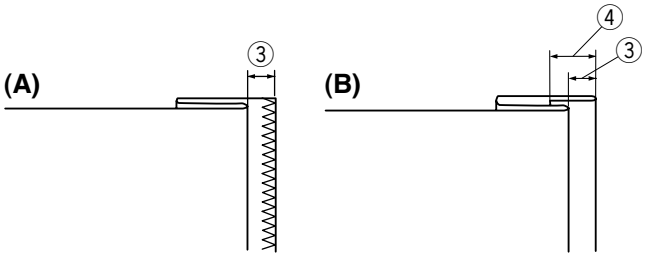

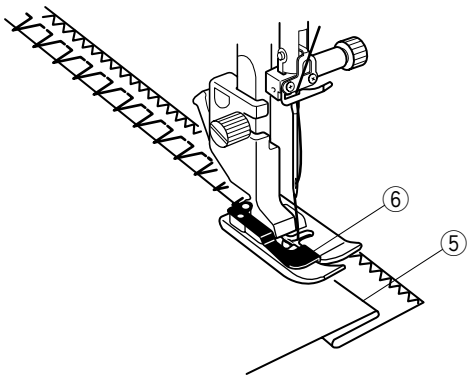

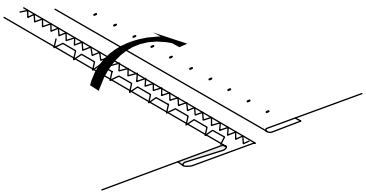

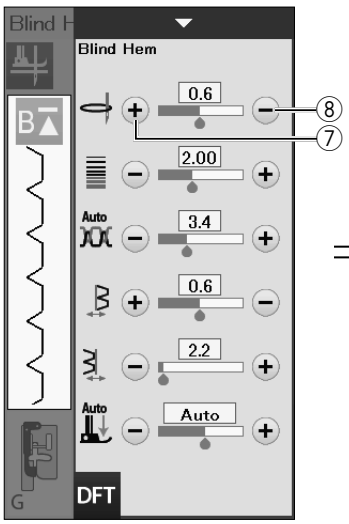

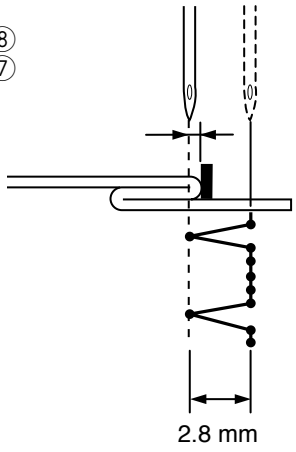

Blind Hem

Select “Blind Hem”.

The following 2 options are available.

① Woven

For blind hemming regular woven fabric

② Stretch/Knit

For blind hemming stretch or knit fabric.

To sew:

Attach the blind hem foot G.

Fold the fabric to form a hem leaving a 0.5 cm (1/4″) allowance as shown.

③ 0.5 cm (1/4″)

(A) Medium to heavy fabrics: The raw edge should be overcasted.
(B) Fine fabrics: Fold the raw edge 1 cm (1/2″).

④ 1 cm (1/2″)

Position the fabric so that the fold comes to the left side of the guide on the foot. Lower the presser foot.
The needle should just pierce the folded edge when it comes over to the left side.
Adjust the position of the needle drop if necessary.

Sew guiding the fold along the guide.

⑤ Fold
⑥ Guide

After sewing is finished, open the fabric flat.
The seam on the right side of the fabric is almost invisible.

Adjusting the needle drop position

Press the setting bar to expand the manual setting window.

Press the “+” key ⑦ in the upper row to move the needle drop positions to the left.
Press the “–” key ⑧ in the upper row to move the needle drop positions to the right.

The needle drop position will change, while the stitch width (2.8 mm) remains consistent.
The distance between the left needle drop position and guide of the foot is indicated in millimeters.

NOTE:
You can alter the stitch width by changing the right needle drop position.

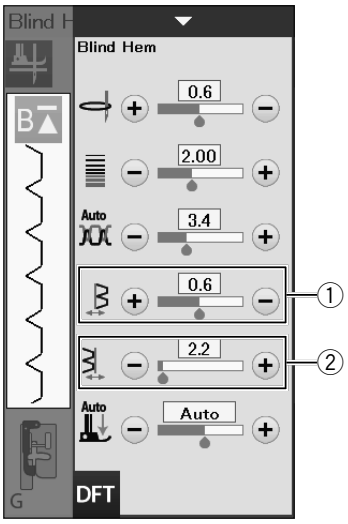

Altering blind hem stitch width

Press the “+” key in ② to increase the stitch width ③.
Press the “–” key in ② to decrease the stitch width ③.

NOTE:
You can move the left needle drop position ④ with the “+” or “–” key in ①.

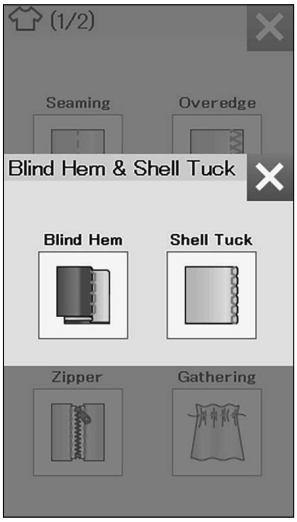

Shell Tuck

Select “Shell Tuck”.
The following 3 options are available.

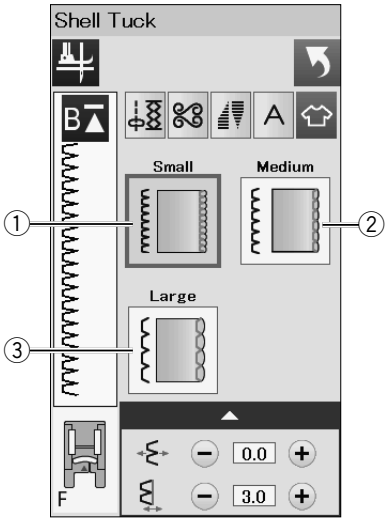

① Small

Narrow shell tuck stitch

② Medium

Medium width shell tuck stitch

③ Large

Regular shell tuck stitch

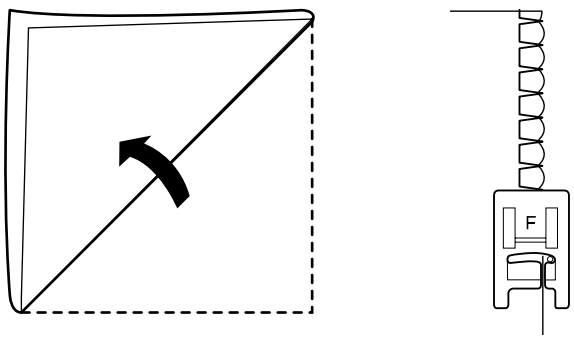

To sew:

Use a light weight fabric (Tricot, for example).
Fold the fabric in bias as shown and stitch on the fold.

Allow the needle to barely clear the folded edge to create a shelled edge.

If you sew shell tucks, space the rows at least 1.5 cm (5/8″) apart.

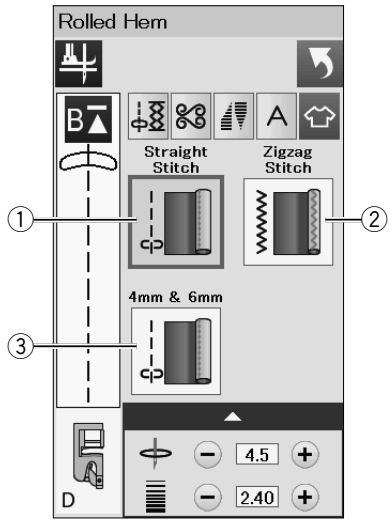

Rolled Hem

① Straight Stitch

Rolled hemming with straight stitch

② Zigzag Stitch

Rolled hemming with narrow zigzag stitch

③ 4 mm & 6 mm

Rolled hemming using optional rolled hemming feet D1 and D2

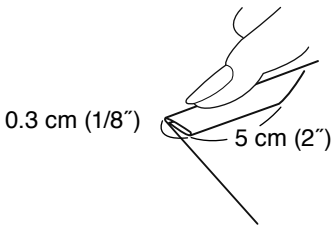

To sew:

Attach the rolled hem foot D.

Fold the fabric edge twice to form a hem, 0.3 cm (1/8″) wide and 5 cm (2″) long then press.

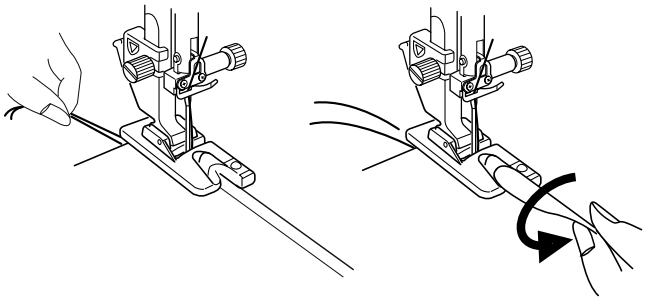

Place the fabric aligning the hem edge with the guide of the foot. Turn the handwheel to lower the needle to the starting point.

Lower the foot and sew several stitches slowly while pulling on the threads to assist feeding the fabric.

Stop the machine and lower the needle into the fabric. Raise the foot and insert the folded portion of the fabric into the curl of the foot.

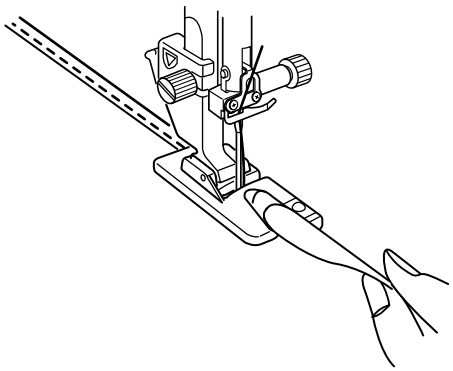

Lower the foot and sew while lifting the edge of the fabric to keep it feeding into the curl smoothly and evenly.

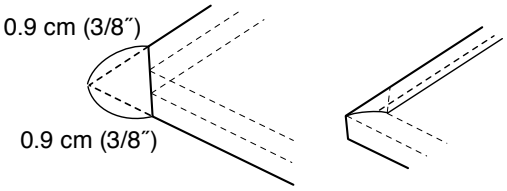

NOTE:
Trim the corner 0.9 cm (3/8″) to reduce bulk.

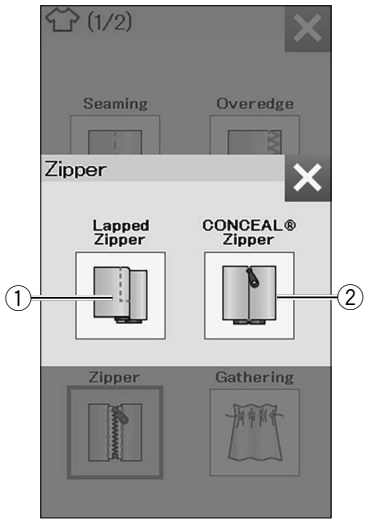

Zipper Sewing

① Lapped Zipper

Lapped zipper application with the zipper foot E

② CONCEAL® Zipper*

CONCEAL® zipper* application with the optional CONCEAL® zipper foot Z*

* “CONCEAL” is a registered trademark of YKK Corporation.

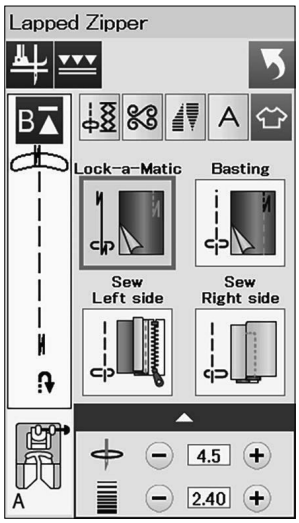

Lapped zipper sewing

Press the lapped zipper icon and the zipper sewing window will open.

Press the sewing step icon and the machine setting will automatically adjust to suit each sewing step.

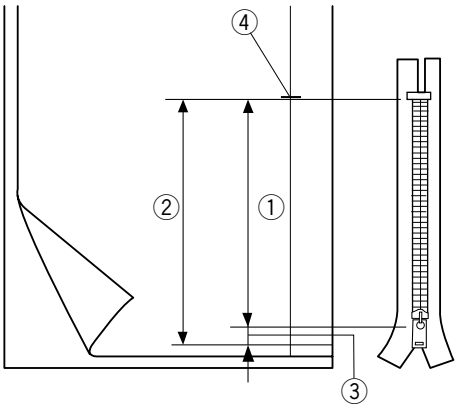

Fabric preparation

Add 1 cm (3/8″) to the zipper size. This is the overall opening size.
Mark the end of opening.

① Zipper size
② Opening size
③ 1 cm (3/8″)
④ End of opening

Attach the zigzag foot A.

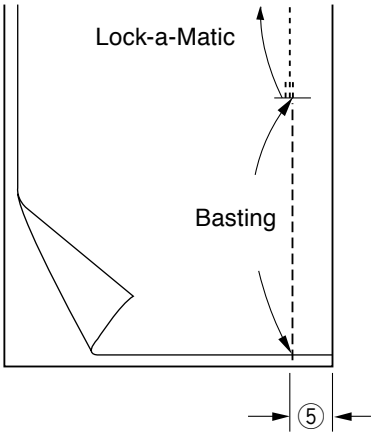

Lock-a-Matic

Place the right sides of the fabric together and sew to the end of the opening leaving a 2 cm (3/4″) allowance.

⑤ 2 cm (3/4″)

Basting

Baste the zipper opening.

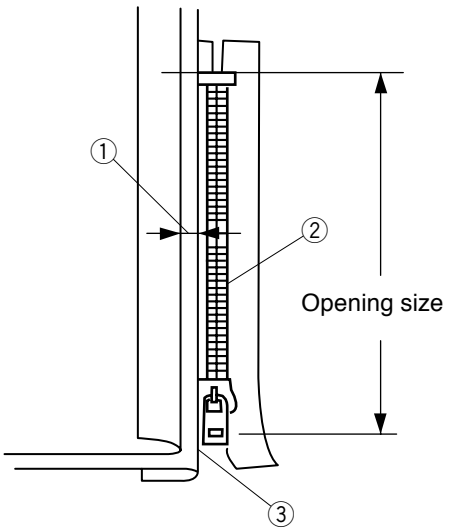

Sew left side

Attach the zipper foot E.
Fold back the left seam allowance. Turn the right seam allowance under to form a 0.2 to 0.3 cm (1/8″) fold.
Place the zipper teeth next to the fold and pin in place.

① 0.2 cm-0.3 cm (1/8″)
② Zipper teeth
③ Fold

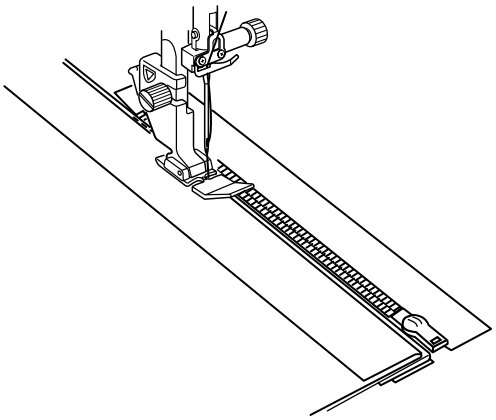

Lower the foot onto the topside at the bottom of the zipper so that the needle pierces the fabric next to the fold and the zipper tape.
Sew along the zipper guiding the zipper teeth along the bottom edge of the foot.

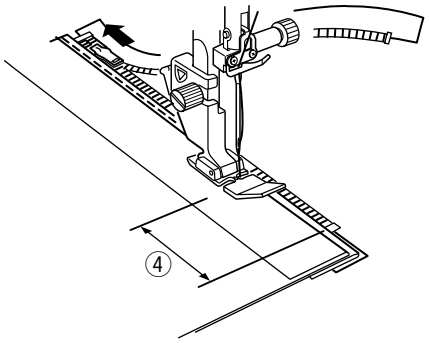

Sew through all layers next to the fold.

Stop 5 cm (2″) before zipper foot E reaches the slider on the zipper tape.

④ 5 cm (2″)

Raise the foot and open the zipper. Lower the foot and stitch the remainder of the seam.

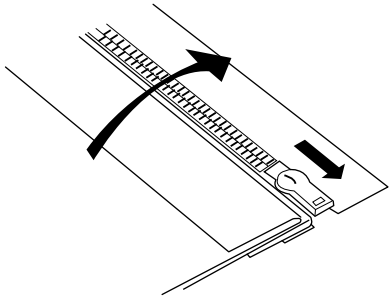

Close the zipper and spread the fabric open flat with the right side of the fabric facing up.

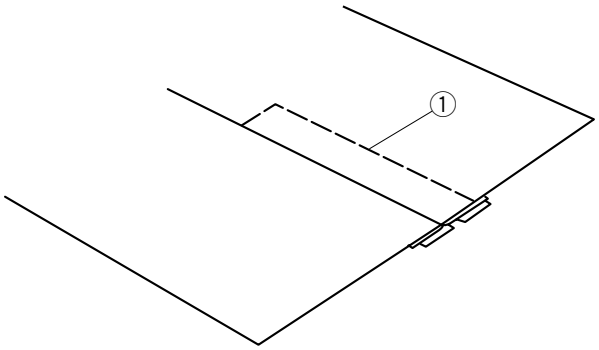

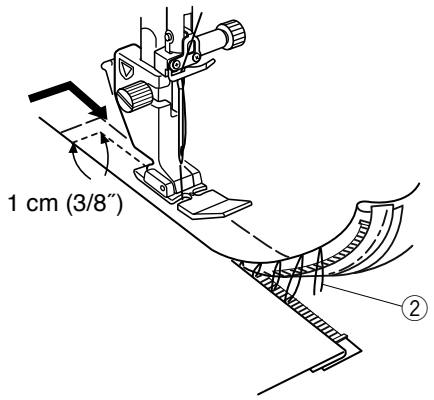

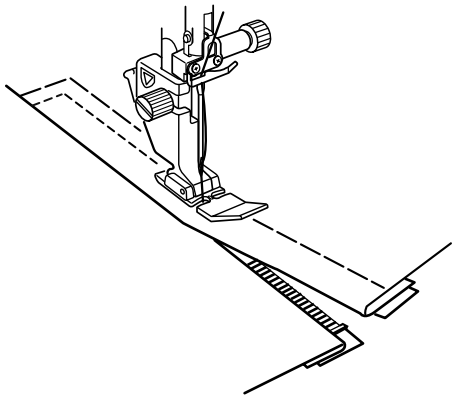

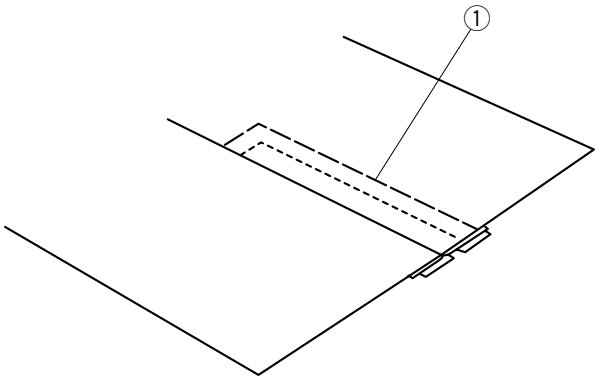

Basting

Replace the foot with the zigzag foot A.
Baste the opened fabric and zipper tape together.

① Basting

Sew right side

Replace the foot with the zipper foot E.
Backstitch across the end of opening to 1 cm (3/8″).
Stitch through the garment and zipper tape, guiding the zipper teeth along the bottom edge on the foot.
Stop about 5 cm (2″) from the top of the zipper.
Lower the needle into the fabric, raise the foot and remove the basting stitches.

② Basting stitches

Open the zipper and move the slider to the rear of the foot.

Lower the foot and stitch the remainder of the seam making sure the fold is even.

Remove the basting stitches.

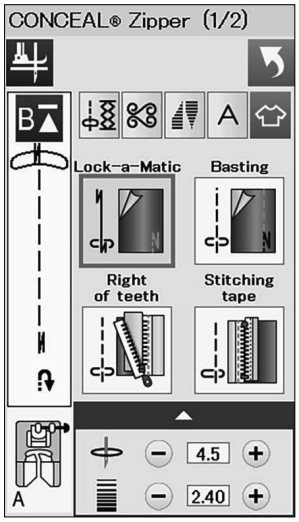

CONCEAL® Zipper (Optional)

Press the CONCEAL® Zipper* icon and the window will show the step-by-step icon keys.

Prepare a CONCEAL® zipper* 2 cm (3/4″) longer than the opening size.

Press the sewing step icon and machine settings will automatically adjust to suit each sewing step.

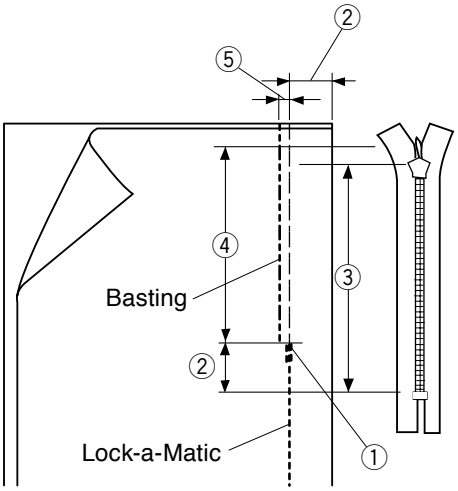

Lock-a-Matic

Attach the zigzag foot A. Place the right sides of the fabric together and sew to the end of the opening with a 2 cm (3/4″) seam allowance. Press the reverse button to lock the seams.

① End of opening
② 2 cm (3/4″)
③ Zipper size
④ Opening size

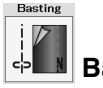

Basting

Baste the opening 0.3 cm (1/8″) inside of the seam line.

⑤ 0.3 cm (1/8″)

Place the right zipper teeth next to the fold and pin it in place.
Fold up the left seam allowance to the bodice. Open the zipper and put it on the right seam allowance with the back side up.

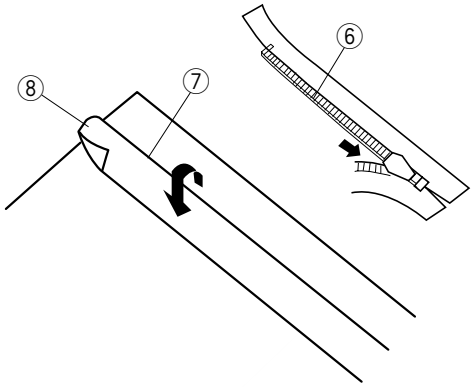

⑥ Zipper teeth
⑦ Fold
⑧ Left seam allowance

Right of teeth

Attach the CONCEAL® zipper foot Z*.
Raise the zipper teeth on the right and lower the foot so the left groove of the foot catches the zipper teeth.
Stitch through the zipper tape and fabric up to the end of the opening.
Reverse the stitches to secure the seam.

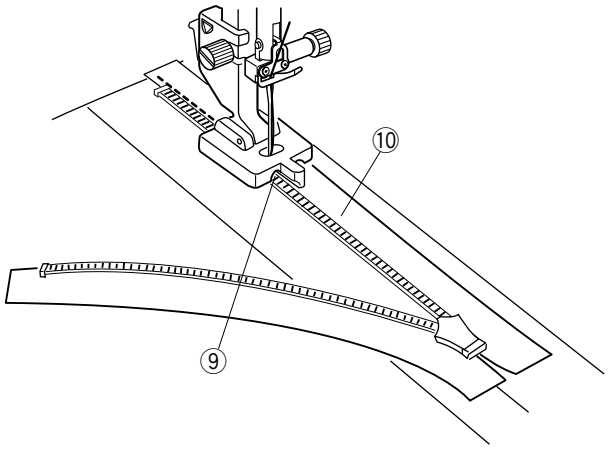

⑨ Left groove
⑩ Zipper tape

* “CONCEAL” is a registered trademark of YKK Corporation.

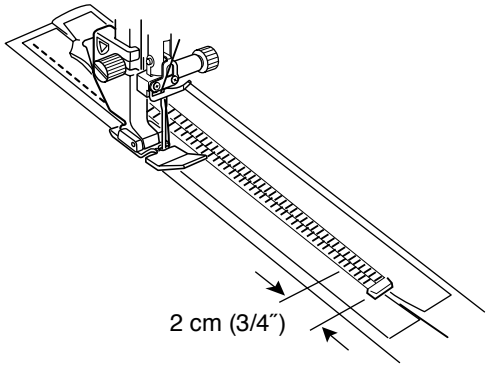

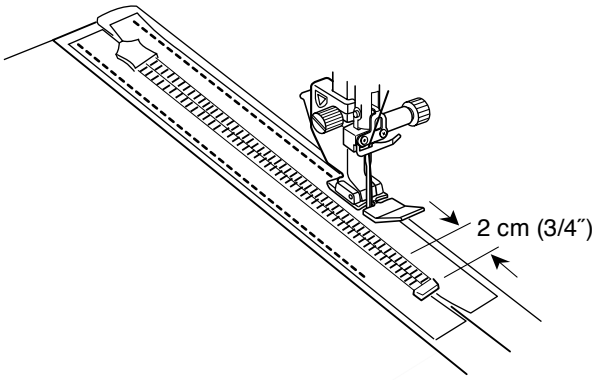

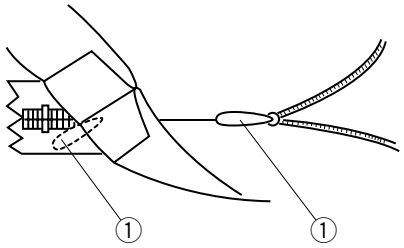

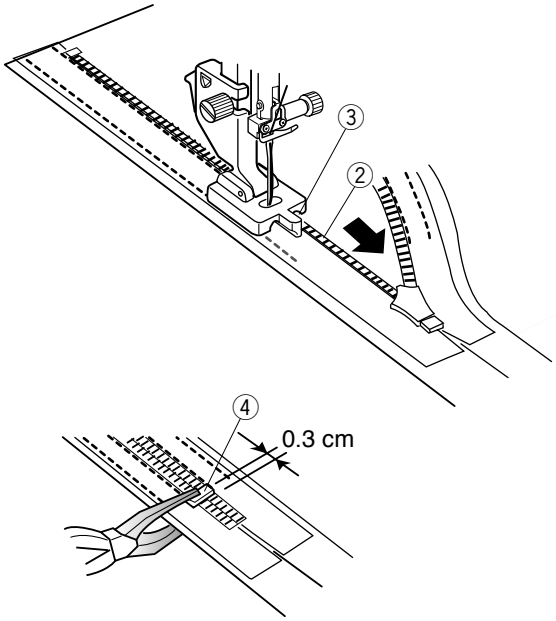

Stitching tape

Raise the foot and close the zipper.
Replace the foot with the zipper foot E.
Turn and fold the bodice to the right. Seam along the edge of the left zipper tape and reverse the stitches 2 cm (3/4″) before the zipper bottom.

Stitching tape

Turn and fold the bodice to the left.
Seam along the edge of the right zipper tape and reverse the stitches 2 cm (3/4″) before the zipper bottom.

Left of teeth

Raise the foot and replace it with the CONCEAL® zipper foot Z*.
Remove the basting stitches.
Open zipper and insert the pull tab between fabric and zipper tape to allow the slider to reach the stopper.

① Pull tab

Raise the zipper teeth on the left and lower the foot so the right groove of the foot catches the zipper teeth. Stitch through the zipper tape and fabric up to the end of the opening. Reverse the stitches to secure the seam.

② Zipper teeth
③ Groove

Slide up the stopper to 0.3 cm (1/8″) below the end of the opening and fasten the stopper with pliers.

④ Stopper

* “CONCEAL” is a registered trademark of YKK Corporation.

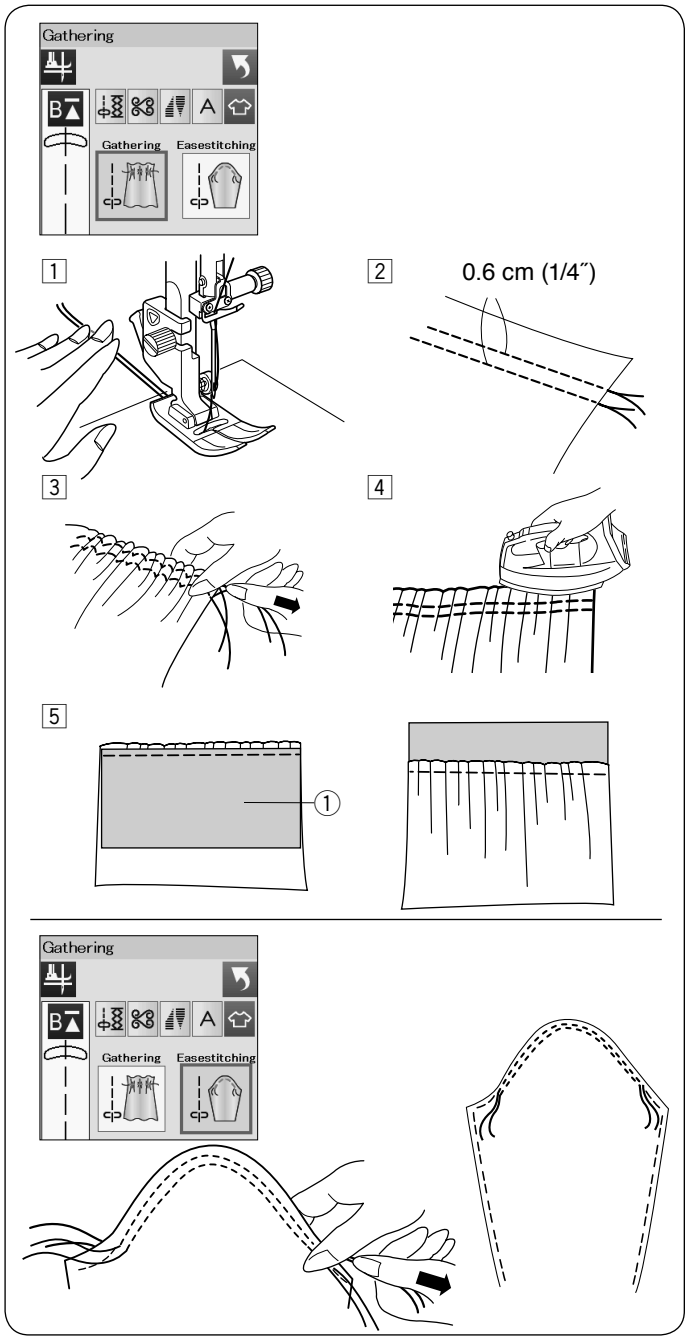

Gathering

1 Pull both threads 10 cm (4″) under and behind the presser foot (refer to page 17).

2 Sew two rows of straight stitches 0.6 cm (1/4″) apart. Knot the threads at the beginning.

3 Pull the bobbin threads at the end to gather the fabric.

4 Knot the threads at the end and distribute the gathers evenly.

5 Prepare the fabric to attach the gathering.

Exit the sewing application.

Select the Straight Stitch U1.

Place the wrong side of the fabric ① under the gathering.

Sew the straight stitch between the two gathering rows.

Remove the two rows of straight stitches.

NOTE:
You may sew the straight stitch under the two gathering rows to cover the remains of gathering rows.

Easing a sleeve top

In addition to the regular gathering stitch, this section offers you a special stitch for easing sleeve tops.

Pull both of the threads about 10 cm (4″).
Sew a pair of lines, 3 mm (1/8″) apart, along the edge of the sleeve top.

Pull the bobbin threads to contract the sleeve top carefully, matching it with the armhole size.

Make sure not to make gathers in the sleeve top.

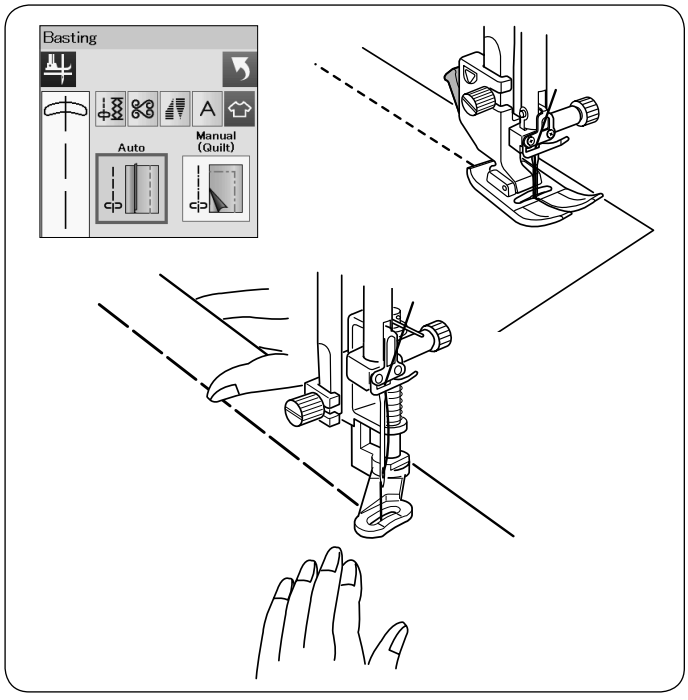

Basting

There are 2 basting stitches available in this section.

Basting (Auto)
This stitch is used for basting zipper tape or fitting of garments.
Sew in the same way as that for straight stitch sewing.

Basting (Manual/Quilting)
Attach the darning foot PD-H.
Lower the feed dogs.

NOTE:
Refer to page 21 for how to attach the darning foot PD-H.

To sew

Hold the fabric taut and depress the foot control.
The machine will make one stitch and stop automatically.

Slide the fabric to the rear for the next stitch.

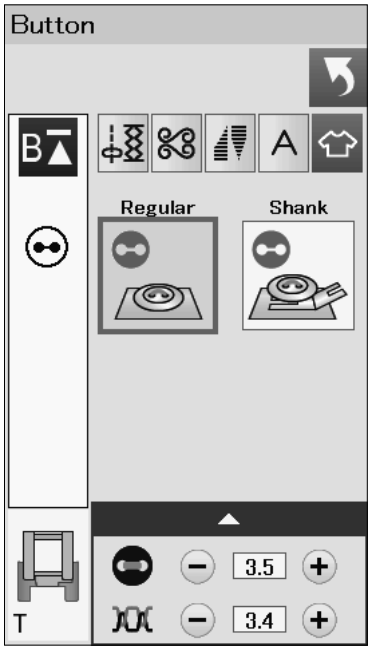

Button Sewing

When attaching a button to thick fabric, you need to make a shank by using the button shank plate.

Select “Shank”. Lower the feed dogs.

Attaching the button sewing foot T

Press the lockout key to lock the machine.
Raise the presser foot with the presser foot lifter.
Insert the rear pin of the foot into the rear groove of the foot holder.

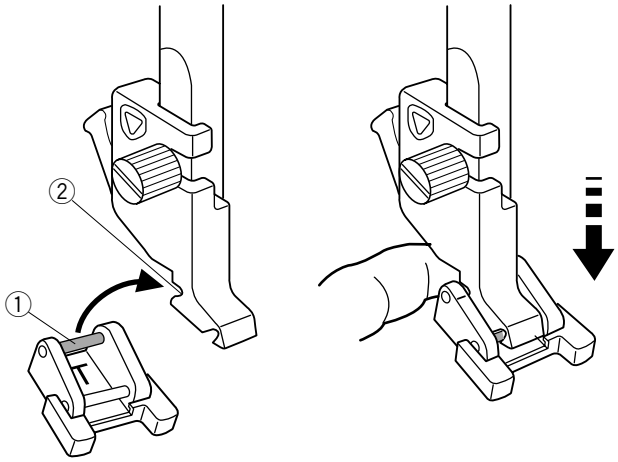

① Rear pin
② Rear groove

Gently lower the presser foot lifter while holding the foot with your finger to fit the foot. Press the lockout key to unlock the machine.

Place a button on the fabric and lower the needle into the left hole of the button by turning the handwheel with your hand.
Insert the button shank plate under the button.
Lower the foot to hold the button in place, aligning the direction of the button.

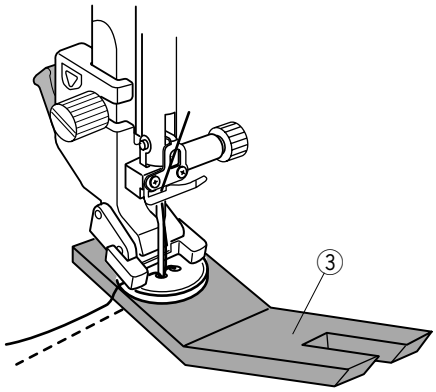

③ Button shank plate

Raise the needle by turning the handwheel until the needle bar swings to the right.
Press the “+” or “–” key so the needle enters into the right hole of the button. The maximum stitch width is 0.7 cm (1/4″).

Start sewing and continue until the machine stops automatically.

Remove the fabric from the machine.

Cut the all threads leaving at least 10 cm (4″) tails.
Trim the thread at the beginning close to the fabric.

Pass the needle thread at the end of stitching through the left hole in the button, between the button and fabric.
Pull the needle thread to bring the bobbin thread up to the right side of the fabric.

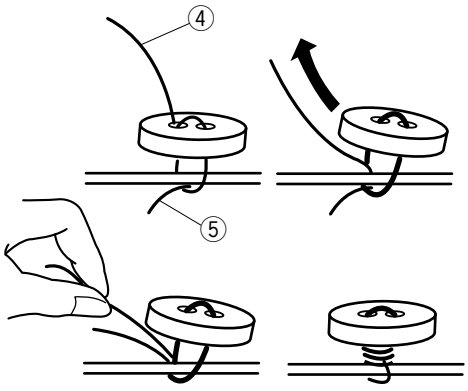

④ Needle thread at the end
⑤ Bobbin thread

Wind the threads to form a shank and knot them together.

NOTE:
The button shank plate cannot be used if the button is too thick.

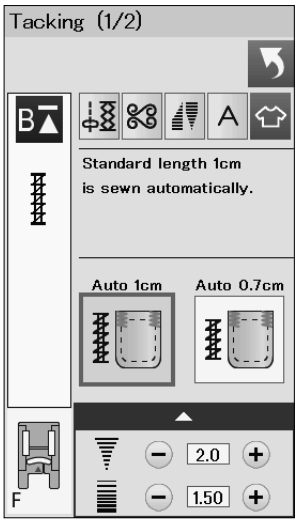

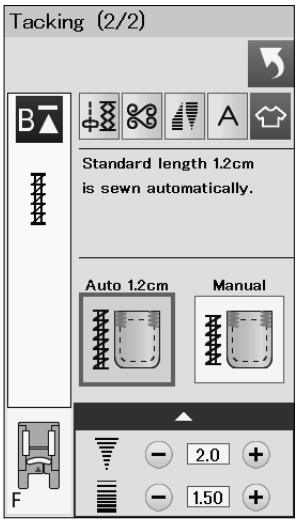

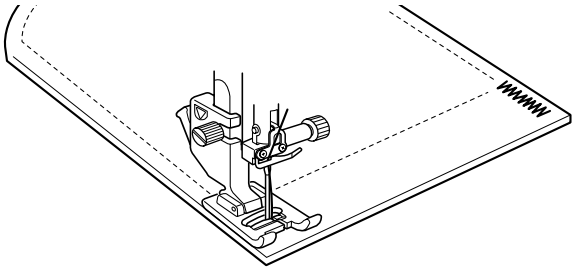

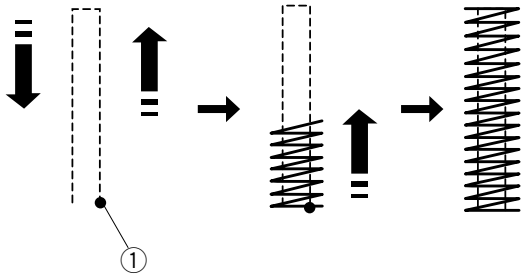

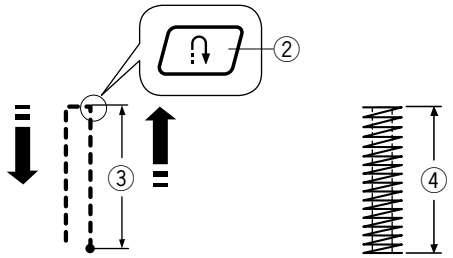

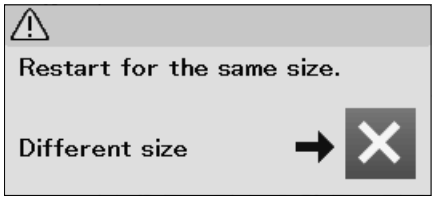

Tacking

Tacking is used to reinforce pockets, crotches and belt carriers where extra strength is needed.

There are 3 auto tacking sizes and manual tacking available.

Attach the satin stitch foot F.

Auto tacking

Lower the needle at the starting point and start sewing. The machine will sew the tack of the selected size and stop automatically when it is finished.

① Starting point

Manual tacking

Start the machine and sew to the required length ③, then press the reverse button ②. This sets the tack length ④. Continue sewing until the machine stops automatically.

③ Required length

NOTE:
The maximum length of tacking is 1.5 cm (5/8″).

To sew the same size tack

To sew another tack in the same size, simply start the machine and sew until the machine stops automatically.

To sew the next tack in a different size, press the X key.

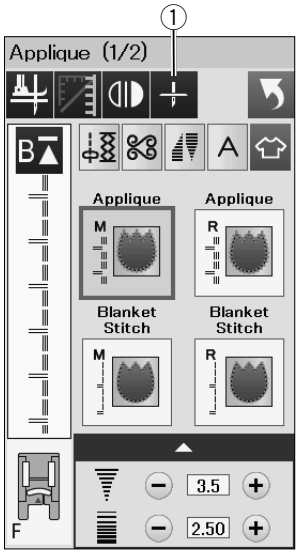

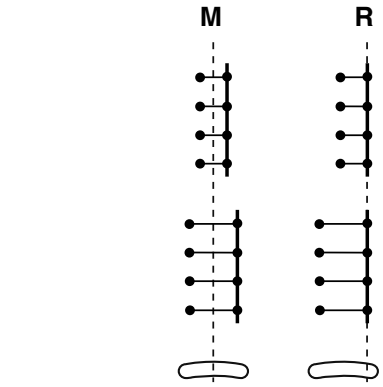

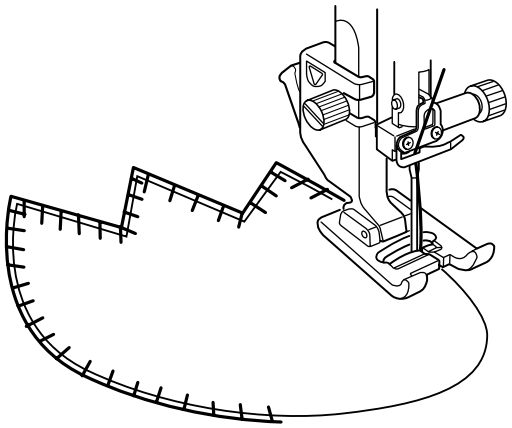

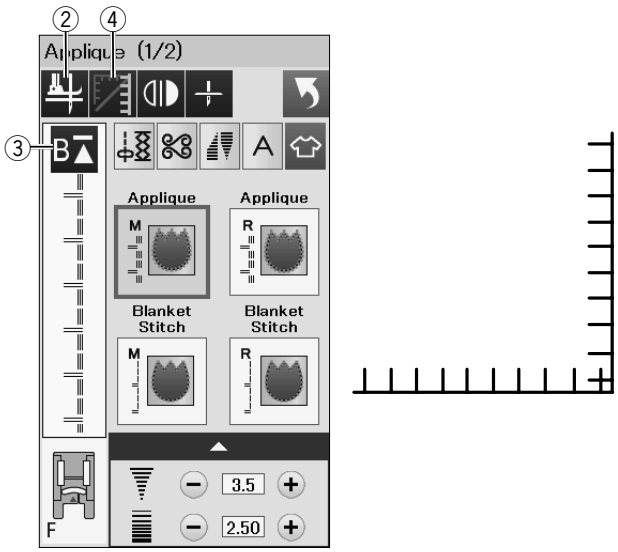

Applique

There are 6 types of applique stitches available in this section.

You can select the needle stop position either up or down by pressing the needle stop position key.

① Needle stop position key

The letter above the stitch image denotes the baseline of the needle drop position.

M: Middle (center)
R: Right

The baseline can be adjusted without changing the stitch width by pressing the “+” or “–” key on the bottom row.

Pivoting at applique corners

When sewing an applique with sharp corners, you may turn on the “Foot up for pivoting” option so that the presser foot automatically goes up when the machine stops.
Press the foot-up key to turn on this option.

② Foot-up key

NOTE:
Make sure to stop the machine with the needle dropped at the outer edge of the applique.

Starting over from the corner

Press the startover key before sewing in the new direction to sew from the beginning of the pattern.

③ Startover key

Two options of startover are available for applique stitches. Press the cornering key to select normal startover or cornering startover.
The key icon will change to show which option is being selected when pressing the key.

④ Cornering key

Normal startover:
Sew a locking stitch then start sewing from the beginning of the pattern.

Cornering startover:
Start sewing from the beginning of the pattern without a locking stitch.

Patchwork

Patchwork piecing

There are 3 stitches for seaming patchwork pieces in this section.

The default stitch length is set at 1.8 mm, ideal for patchwork piecing, but you can fine tune the stitch length by pressing the “+” or “–” key.

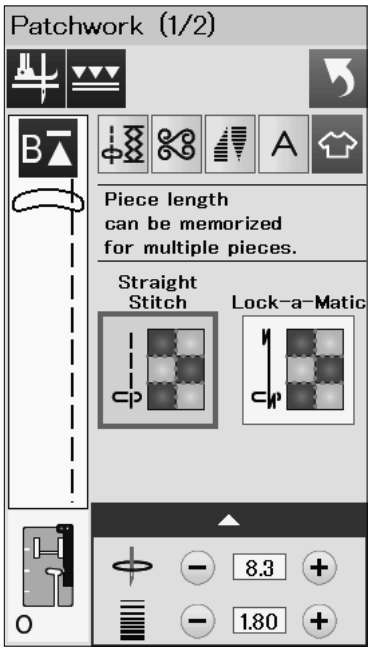

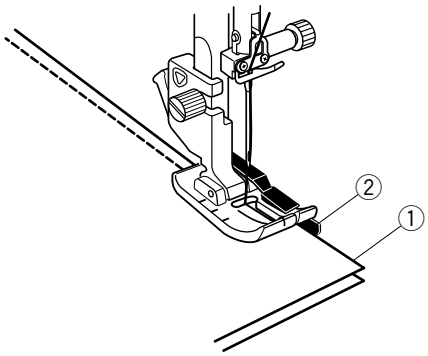

Attach 1/4″ seam foot O, which helps you to keep a constant 1/4″ (6 mm) seam allowance.
Put 2 pieces of fabric with right sides together.
Place the patchwork pieces under the foot so that the edge of the fabric matches the guide on the presser foot.

① Edges of fabric
② Guide on the 1/4″ seam foot O

When you stop the machine, a message will appear.
Press the OK key and the machine memorizes the seam length to sew another piece of the same length.
Press the X key to sew in a different size.

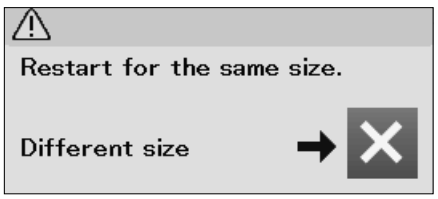

After sewing the memorized length, a message will appear.
To sew the same length, start the machine and it will stop automatically after sewing the memorized length.

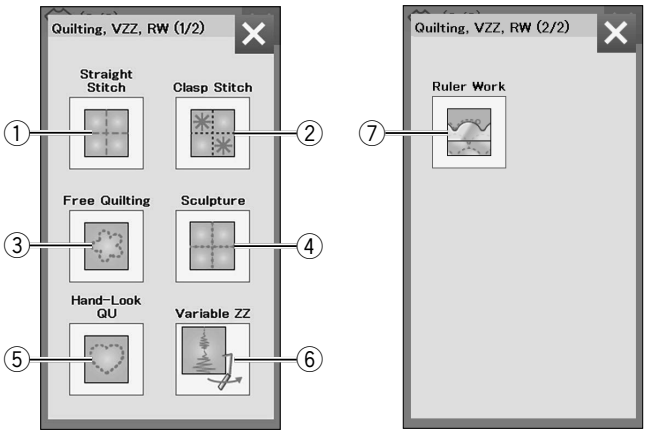

Quilting, Variable Zigzag and Ruler Work

In this section, 7 types of useful stitches for quilting are available.

① Straight stitches (with dual feed)
② Clasp stitches
③ Free motion quilting stitches
④ Sculpture stitches (with dual feed)
⑤ Hand-look quilt stitches
⑥ Variable zigzag stitches
⑦ Ruler work

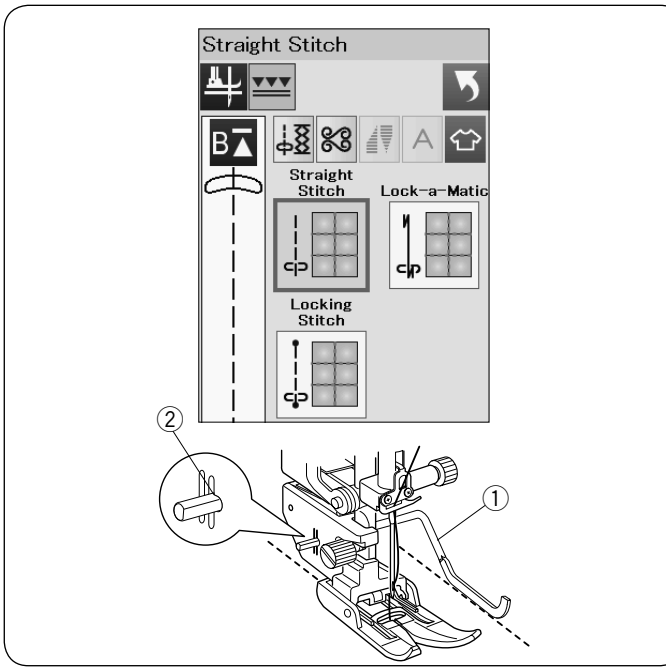

Straight Stitches (with dual feed)

Straight stitches in this section are suitable for seaming quilt layers using the dual feed foot (refer to page 21 for how to attach it). Please refer to page 60 if you wish to use zigzag foot A.

Quilting guide bar for dual feed foot

The quilting guide bar is helpful when sewing parallel, evenly spaced rows of stitching.

Insert the quilting guide bar into the hole in the rear of the foot holder.
Shift the quilting guide bar to the desired spacing.

① Quilting guide bar
② Hole

Sew rows of stitching while tracing the previous row of stitches with the quilting guide bar.

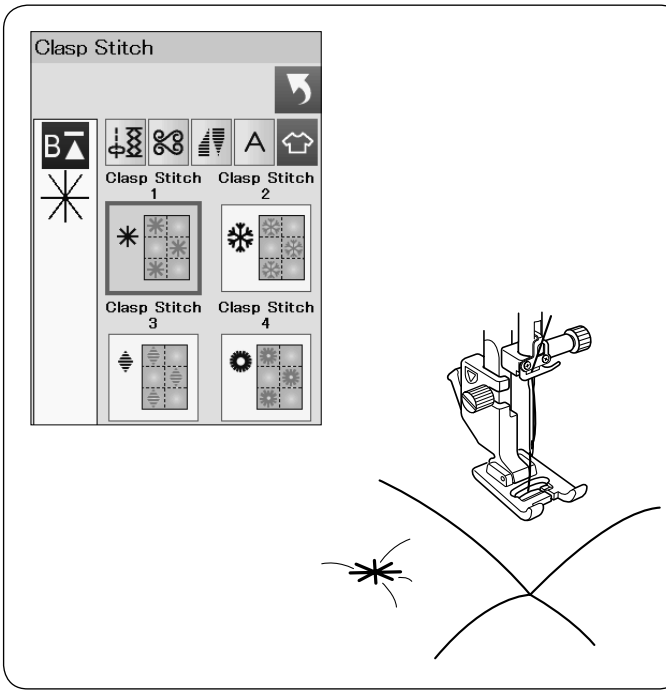

Clasp Stitches

You can close quilt layers and batting using the clasp stitch.
Use the satin stitch foot F.
The machine sews one unit of the pattern and automatically stops with the needle in up position when completed.

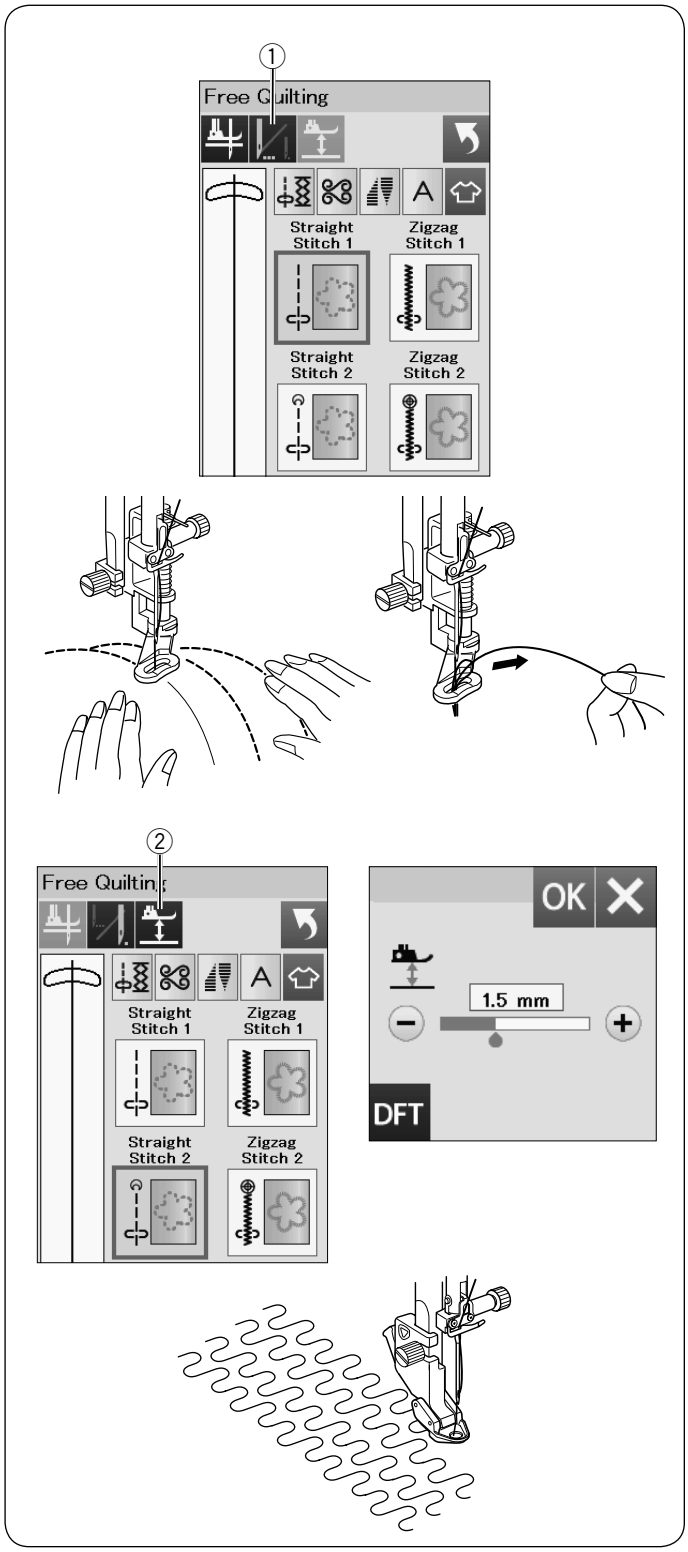

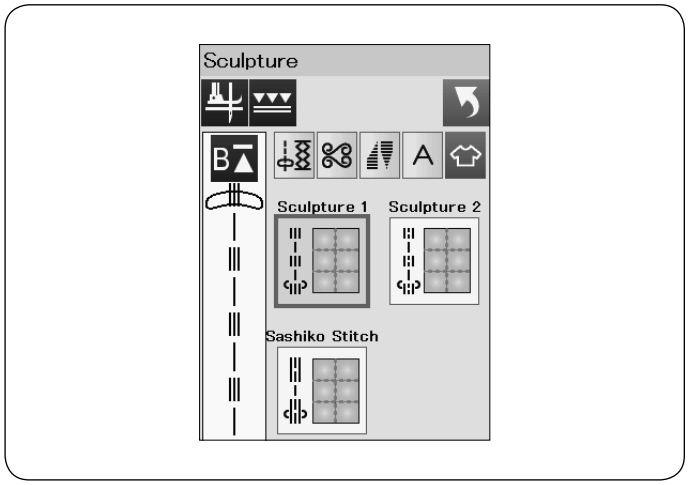

Free Quilting

For ordinary and bulky quilts, select “Straight Stitch 1” or “Zigzag Stitch 1”, and use the darning foot PD-H (refer to page 21 for how to attach the darning foot).
Select the “Straight Stitch 2” or “Zigzag Stitch 2” for flatter quilts and use the free quilting foot QC, QO or QV.
Refer to page 90 (button sewing foot) for how to attach the free quilt feet.

One Stitch Off

The machine stops automatically after sewing one stitch so that you can bring the bobbin thread up to prevent it from bunching up on the wrong side of the fabric.

Hold the needle thread and sew one stitch and the machine stops automatically.
Pull the needle thread up to bring the bobbin thread up.

Hold both the needle and bobbin threads and sew several stitches to secure the threads.
You can trim the thread tails with scissors.
The machine will stitch continuously when you resume sewing.

If you wish to start sewing without “one stitch off”, press the one stitch off key to cancel this function.
The key icon changes to .
When “one stitch off” is active, the key icon shows .

① One stitch off key

To sew

Sew at medium speed while guiding the fabric with your hands.
Move the quilt 3 mm or less per stitch.

Foot Height for Free Motion Quilting

When “Straight Stitch 2” or “Zigzag Stitch 2” is selected, the height of down position of the free motion quilting feet (QC, QO, QV) is optimized automatically.

However, you can fine tune the foot height according to the quilt thickness.
Place the fabric under the foot and lower the foot.
Press the foot height key and the adjusting window opens. Adjust the foot height by pressing the “+” key or “–” key and press the OK key to register the setting.

② Foot height key

Reduce the height if the fabrics bounce when sewing.
Increase the height if the foot gets trapped in the fabrics when sewing.

NOTE:
- The purple tip needle is recommended to prevent skipped stitches.
- Do not move the quilt layers toward you when the open-toe foot is attached.

Sculpture Stitches

These stitches are used to accentuate design outlines and to create a mock hand-quilt.

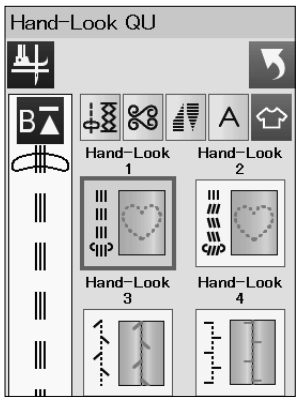

Hand-look Quilt Stitches

Use a transparent nylon thread for the needle and ordinary sewing thread for the bobbin.
The bobbin thread is pulled up on the right side of the fabric and the stitches will look as if sewn by hand.

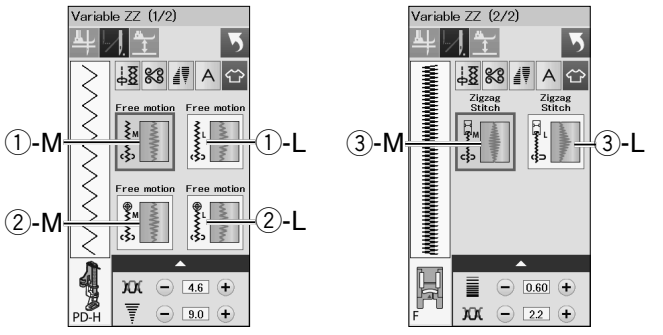

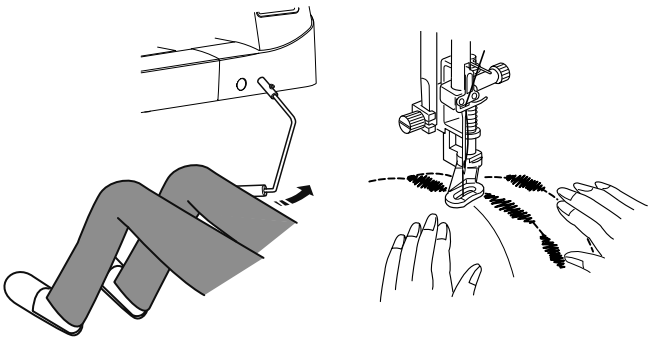

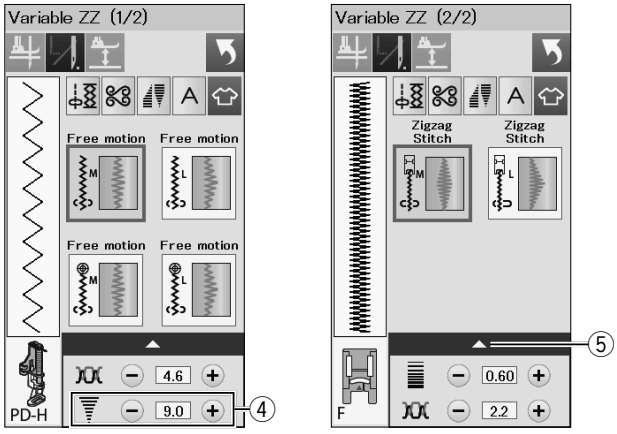

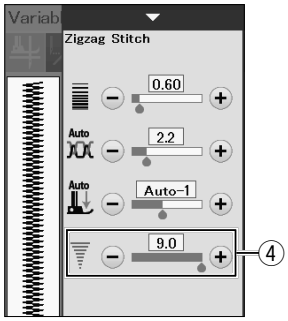

Variable Zigzag

This unique feature allows you to control zigzag width with the knee lifter.

Select ①-M or ①-L, using the darning foot PD-H for sewing quilt layers. Drop the feed dogs. Guide the fabric with your hands while sewing.

Select ②-M or ②-L, using the clear view free quilt foot QV (refer to page 90 for how to attach the foot: same as button sewing foot T) for sewing flat and firm fabrics. Drop the feed dogs. Guide the fabric with your hands while sewing.

Select ③-M or ③-L, using the satin stitch foot for sewing variable zigzag stitches.
The fabric is fed by the feed dogs and the stitch width can be varied with the knee lifter.

Attach a stabilizer to the wrong side of the fabric if needed.
Sew at slow to medium speed while guiding the fabric with your hands and controlling the stitch width with your knee.

NOTE:
- When the machine stops, you can raise and lower the presser foot with the knee lifter.
- The purple tip needle is recommended to prevent skipped stitches.

Maximum Zigzag Width Adjustment

The maximum zigzag width can be limited to suit your sewing needs.

Press the “+” or “–” key beside the maximum zigzag width setting ④ to limit the maximum zigzag width to your preference.

For the variable zigzag stitches with the satin stitch foot, press the setting bar ⑤ to open the maximum zigzag width setting.

④ Maximum zigzag width setting
⑤ Setting bar

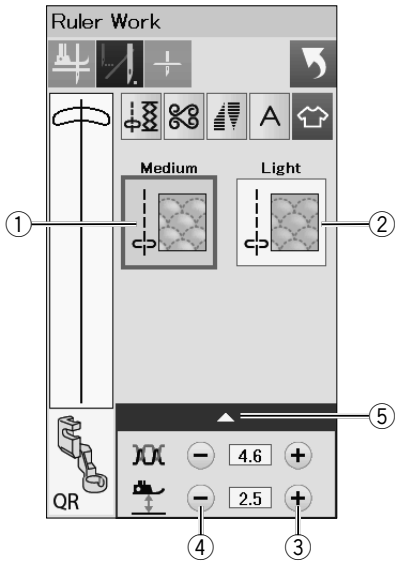

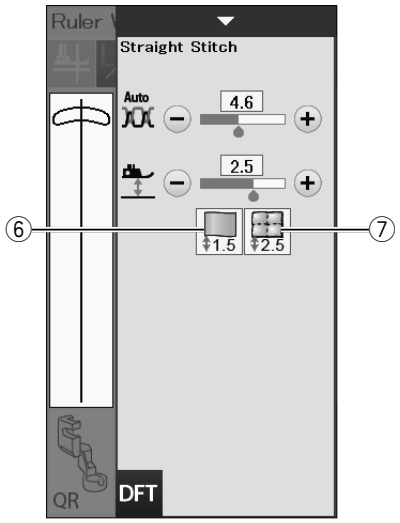

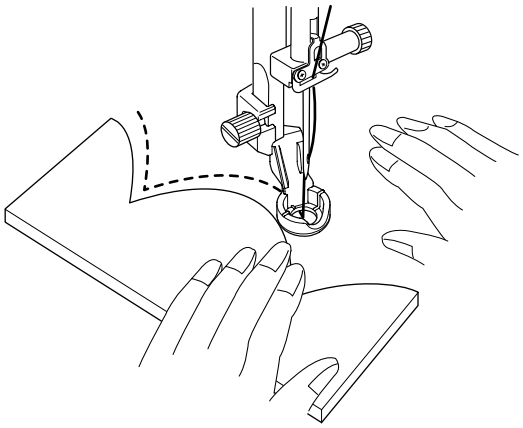

Ruler Work (Optional)

Guide the foot along the quilting template (optional) to create straight, curved or repetitious patterns depending on the shape of the ruler.

Attach the ruler work foot QR (optional) when the “Ruler Work” is displayed as shown.
Refer to page 21 for how to attach the ruler work foot QR.

Place the fabric under the ruler work foot QR.

Adjust the presser foot height to suite the quilt thickness.
For ordinary and bulky quilts, select “Medium” ①.
For flatter quilts, select “Light” ②.
You can fine adjust the presser foot height by pressing the “+” ③ or “–” ④ key.

You can also adjust the presser foot height by pressing the “1.5” icon or “2.5” icon.

Press the setting bar ⑤ to open the manual setting window.
The “1.5” icon ⑥ is for flatter quilts.
The “2.5” icon ⑦ is for ordinary and bulky quilts.

Place the quilting template on the edge of the ruler work foot QR.
Sew while guiding the fabric and ruler together along the edge of the ruler work foot QR.

NOTE:
- A ruler (quilting template) for ruler work sewing is required.
- Use the ruler (quilting template) for high shank or long arm quilting machines (4.5 mm - 6.35 mm thickness).
- The purple tip needle is recommended to prevent skipped stitches.

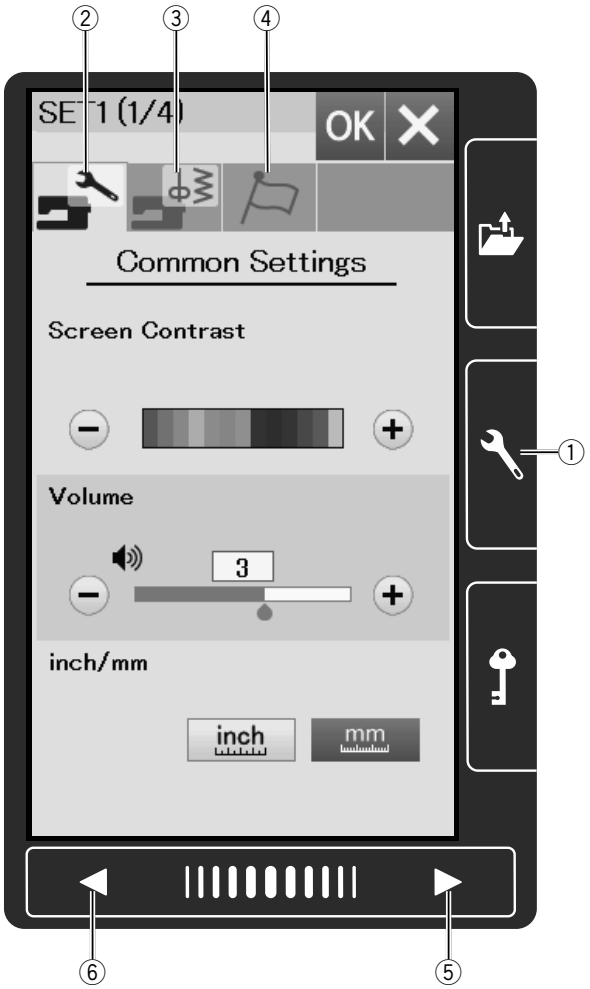

CUSTOMIZING MACHINE SETTINGS

Machine Setting Mode

Press the set mode key to enter the machine setting mode.
You can select various options and customize the machine settings to suit your personal preference.

① Set mode key

Press one of the 3 keys to select the mode to customize.

② Common setting mode key

Press the common setting mode key to enter the common setting mode.
In this mode, you can customize the general machine settings and options.

③ Ordinary sewing setting mode key

Press the ordinary setting mode key to enter the ordinary setting mode.
In this mode, you can customize the machine settings and options for ordinary sewing (refer to pages 101-103 for the operation).

④ Language selection mode key

Press the language selection mode key to enter the language selection mode. In this mode, you can select the desired language for the screen messages.

To browse pages in each mode, press the next page key or previous page key.

⑤ Next page key
⑥ Previous page key

Registering the custom settings
After customizing the settings, press the OK key to enable the new settings.
To cancel the changes to the settings, press the X key and the setting mode window will close.

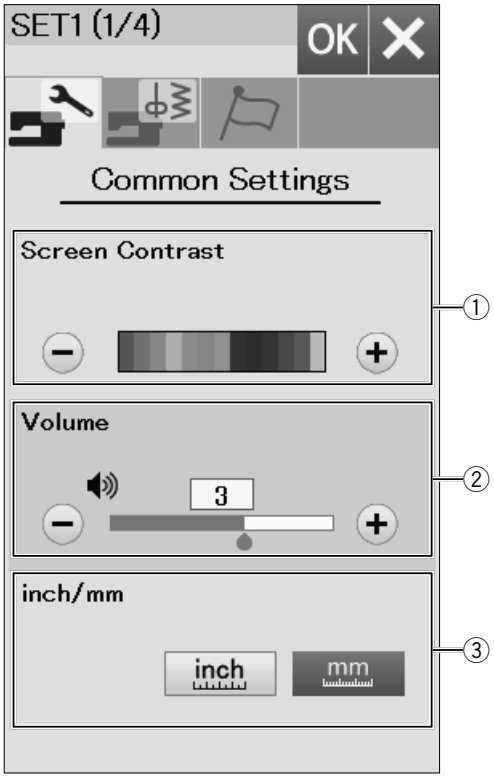

Common Setting Mode

① Screen Contrast

You can adjust the contrast of the visual touch screen by pressing the “+” or “–” key.

② Sound Volume

The signal sound can be adjusted by pressing the “+” or “–” key.
Set the value to “0” by pressing the “–” key several times to mute the signal sounds.

③ Inch/mm Option

You can set your machine’s dimensional unit to either inches or millimeters by pressing the “inch” or “mm” icon key.
The default unit is millimeters.

Press the next page key to show the next menu.

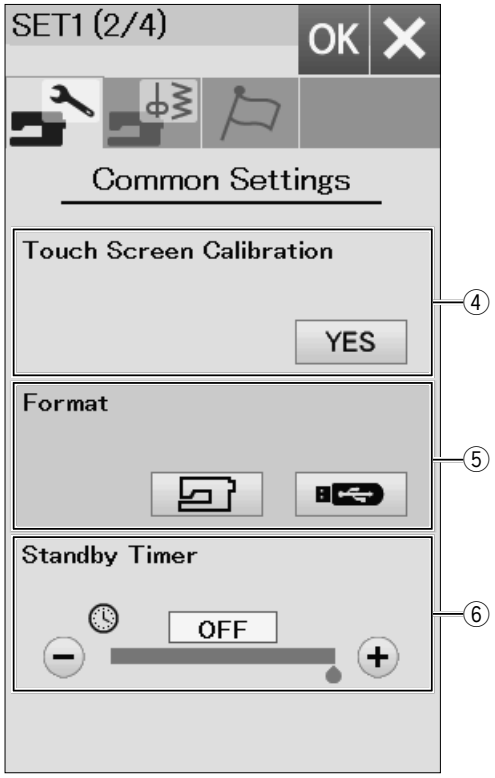

④ Touch Screen Calibration

You can calibrate the key positions of the touch screen if you feel the touch screen key is not responding properly.
Press the Yes key to open the calibration window.
Press the “+” sign with the touch panel stylus as the sign appears.
When you press the last sign, the screen shows “END” and the calibration window will close.

⑤ Formatting the memory

If the internal memory of the machine or USB flash drive does not function due to damage to the memory bank, you need to re-enable it by formatting the memory.
To format the machine’s internal memory, press the machine icon key and a confirmation message will appear. Press the OK key to format.
To format a USB flash drive, press the USB icon and the confirmation window will open. Press the OK key to format.

⚠ CAUTION:
Do not turn off the power or disconnect the USB flash drive while a warning message is displayed otherwise it may damage the memory bank.

NOTE:
- This model supports FAT16 and FAT32 formats only. If the USB flash drive is not read, check the format of it (refer to pages 109-110).
- Do not use a USB card reader and USB hub.

⑥ Standby Timer

The sewing lights will turn off and the machine will enter standby mode if you do not use the machine within the time period set by this timer. Doing any operation will turn the lights and screen on again.
The standby timer can be set from 1 to 30 minutes.
If you wish to turn off the timer, press and hold the “+” key until “OFF” shows in the timer window.

Press the next page key to show the next menu.

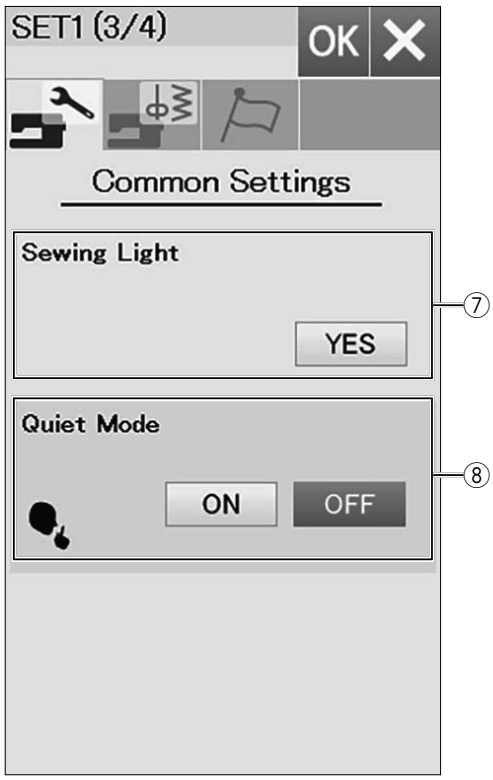

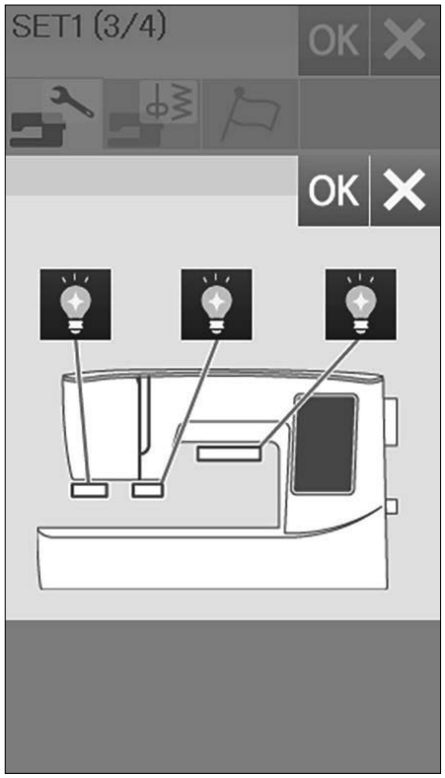

⑦ Sewing Light

The sewing lights can be turned on or off individually. Press the corresponding light keys to turn on or off the sewing lights.

⑧ Quiet Mode

If you prefer the machine to run more quietly, turn on this option so the signal sound and start-up sewing speed will be set at the lowest levels.
The quiet mode setting overrules any previous settings for these parameters.

Press the next page key to show the next menu.

NOTE:
The quiet sign ⑨ will appear on the right upper corner of the screen, sound volume on the common settings, and the adjustable start-up speed on the ordinary sewing settings when the quiet mode option is on.

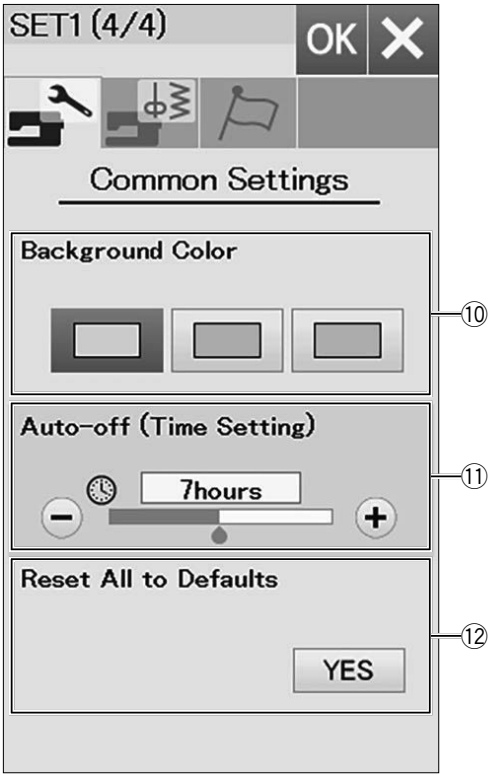

⑩ **Background Color**

You can select from the colorful wallpapers for the background of the visual touch screen by pressing the relevant icon.

⑪ **Auto-off Timer**

The machine will be automatically turned off if you do not use the machine within the time period set by this timer.
The auto-off timer can be set from 1 to 12 hours.
If you wish to turn off the timer, press and hold the “+” key until “OFF” shows in the timer window.
To turn on the machine again, turn the power switch ON.

⑫ **Reset All to Defaults**

Press the Yes key to reset all the parameters to the original values (factory settings).

Press the OK key to register the new settings.

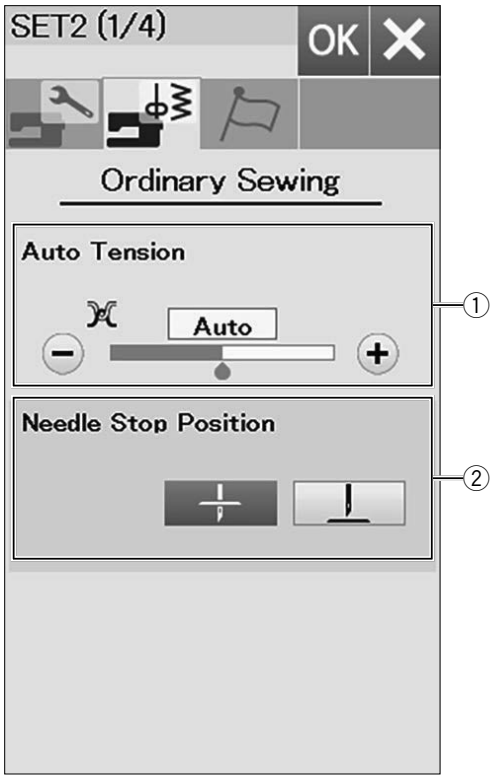

Ordinary Sewing Setting Mode

① **Auto thread tension**

You can adjust the auto thread tension level by pressing the “+” or “–” key.

② **Needle stop position**

The machine always stops with the needle in the down position except when sewing buttonholes, specialty stitches, monograms, etc. However you can change the needle stop position to up by pressing the needle up key.

NOTE:
The machine stops with the needle in the down position if Foot-up key option is turned on, even if the needle stop position is set to up position.

Press the next page key to show the next menu.

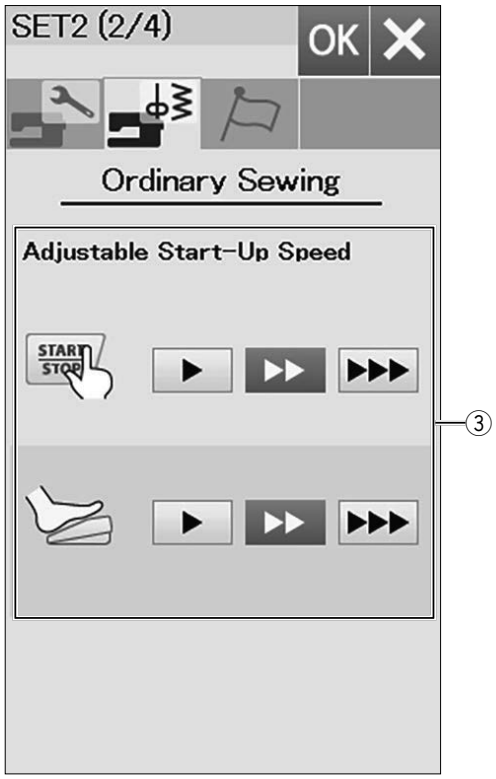

③ Adjustable Start-Up Speed

The machine will start running slowly and the sewing speed will gradually increase to maximum. You can select the desired start-up speed from slow, normal or high by pressing the corresponding key, and set the speed for the start/stop button or foot control individually.

Press the next page key to show the next menu.

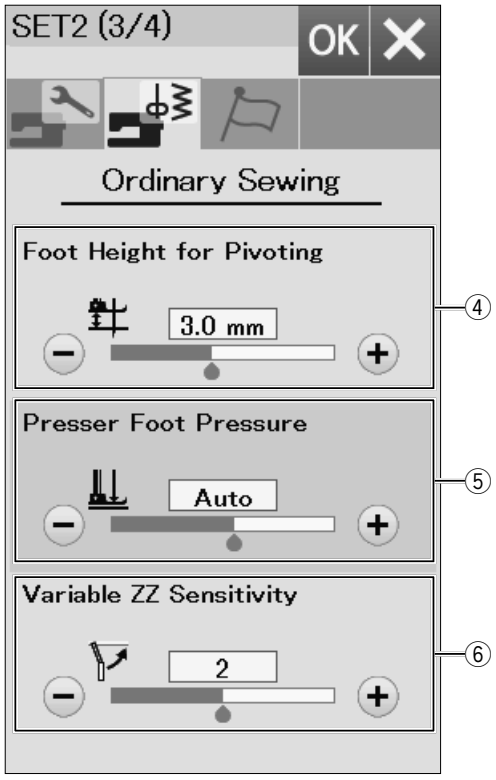

④ Foot height for pivoting

When the foot up option is turned on, the presser foot will automatically go up when the machine stops.
The height of the foot in the up position can be adjusted by pressing the “+” key or “–” key in accordance with thickness of the fabrics.

⑤ Foot pressure

The foot pressure is automatically optimized but you can adjust the foot pressure manually by pressing the “+” key or “–” key.

⑥ Variable zigzag sensitivity

You can adjust the amount of needle swing against the knee lifter movement for variable zigzag in sewing applications.
Press the “–” key so the needle swings a small amount when moving the knee lifter.
Press the “+” key so the needle swings a large amount when moving the knee lifter.

Press the next page key to show the next menu.

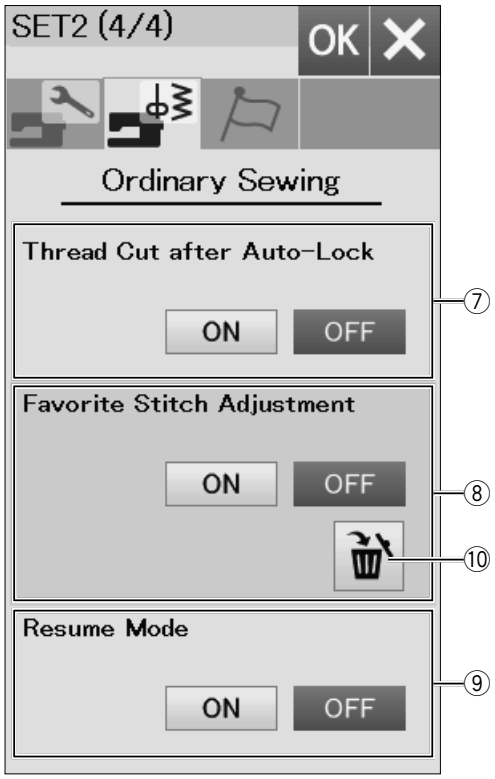

⑦ Thread Cut after Auto-Lock

The machine automatically trims the threads after sewing locking stitches when this option is turned on.

⑧ Favorite Stitch Adjustment

If you wish to save the changes to manual stitch settings, turn on this option by pressing the ON key.
If this option if turned off, the manual stitch setting will be cleared when turn the power switch OFF.

Press the delete icon ⑩ to clear the manual stitch setting.

NOTE:
This option is available for all stitches in ordinary sewing mode except monogram.

⑨ Resume Mode

Turn on this option when you wish to resume the last pattern sewn before turning the power switch OFF.

When the power is turned on again, the confirmation message will appear. Press the OK key to resume the last pattern.

NOTE:
Resume data will be cleared under the following conditions:

- Created stitch is saved.
- Created stitch is deleted with the delete key.
- The internal memory is formatted.

After customizing the settings, press the OK key to enable the new settings.

Language Selection Mode

Select the desired language and press the OK key.
The visual touch screen shows messages in the selected language.

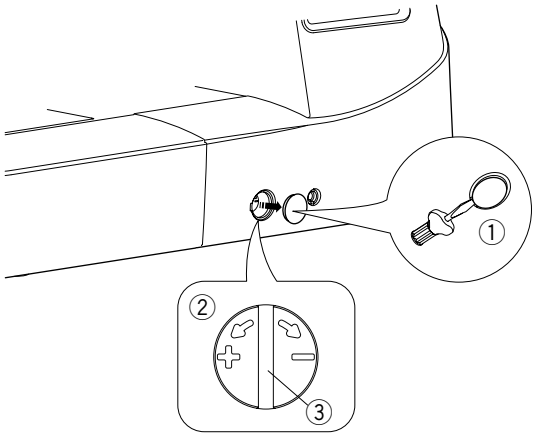

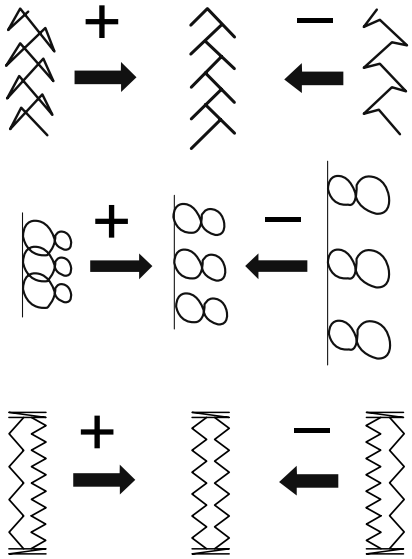

Correcting Distorted Stitch Patterns

The sewing results of the stitch patterns may vary depending upon sewing conditions, such as sewing speed, type of the fabric, number of layers, etc.
Always test sew on a scrap piece of the fabric that you wish to use.

If decorative stitch patterns, monogram or the stretch buttonhole is distorted, correct it with the feed balancing dial.
Remove the cap by using the screwdriver, etc. Make sure not to scratch the machine body with the screwdriver.
Set the feed balancing dial at the neutral position for normal sewing.

① Cap
② Feed balancing dial
③ Neutral position

NOTE:
Return the feed balancing dial to its neutral position when the sewing is finished.

Stretch stitch pattern (Q24)
If the pattern is compressed, turn the feed balancing dial in the direction of “+”.
If the pattern is drawn out, turn the feed balancing dial in the direction of “–”.

Letters and numbers
If the pattern is compressed, turn the feed balancing dial in the direction of “+”.
If the pattern is drawn out, turn the feed balancing dial in the direction of “–”.

Stitch balance of the stretch buttonholes (B8)
If the right row is denser, turn the dial in the direction of “+”.
If the left row is denser, turn the dial in the direction of “–”.

1

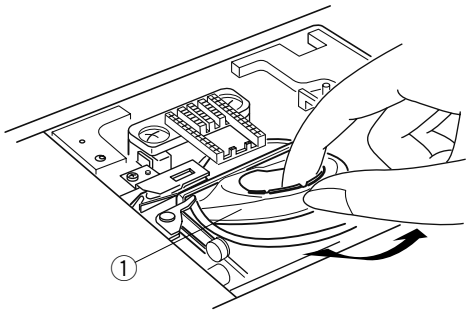

2

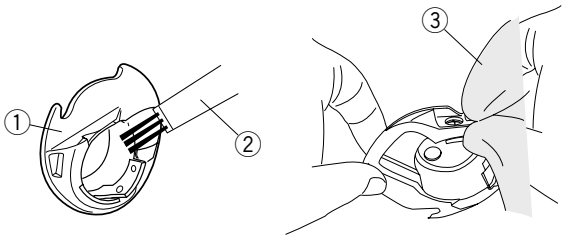

3

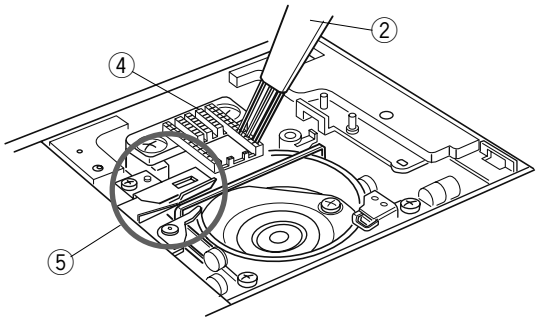

4

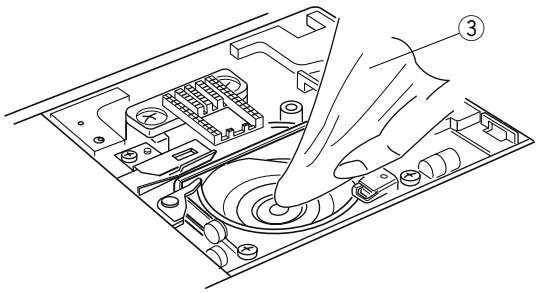

5

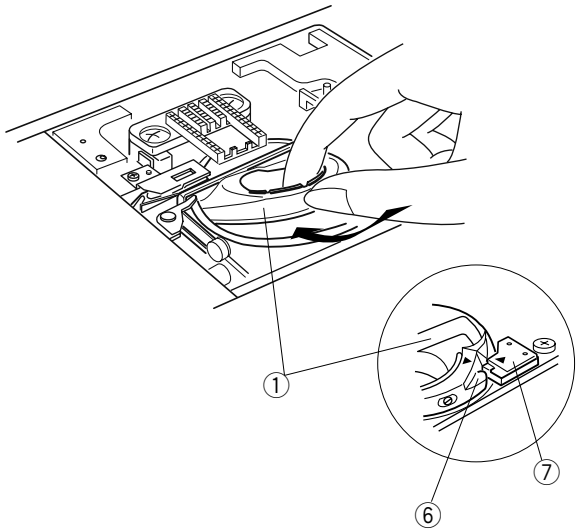

CARE AND MAINTENANCE

⚠ WARNING:

- Turn the power switch OFF and unplug the machine before cleaning.
- Do not dismantle the machine in any way other than as explained in this section.

⚠ CAUTION:

- Do not store the machine in a high-humidity area, near a heat radiator, or in direct sunlight. Store the machine in cool dry place.
- Clean the outside of the machine with a soft cloth.
- Do not use chemical solvents.

Cleaning the Hook Area

Clean the hook area at least once a month.

NOTE:
Do not dismantle the machine in any way other than as explained in this section.

1 Turn the power switch OFF and unplug the machine.
Remove the needle and presser foot.
Remove the needle plate (refer to page 22).
Take out the bobbin and bobbin holder.
① Bobbin holder

2 Clean the bobbin holder with a lint brush.
Wipe the bobbin holder both inside and outside with a soft cloth.
② Lint brush
③ Soft cloth

3 Clean the feed dogs and auto thread cutter device with the lint brush.
④ Feed dogs
⑤ Auto thread cutter device

4 Clean the hook race with a soft cloth.
③ Soft cloth

5 Insert the bobbin holder so that the knob fits next to the stopper in the hook race.
Attach the needle plate, presser foot and needle.
Insert the bobbin.
⑥ Knob
⑦ Stopper

Cleaning the Inside of the Thread Guide

Clean the inside of the thread guide plate under the top cover at least once a month.

1

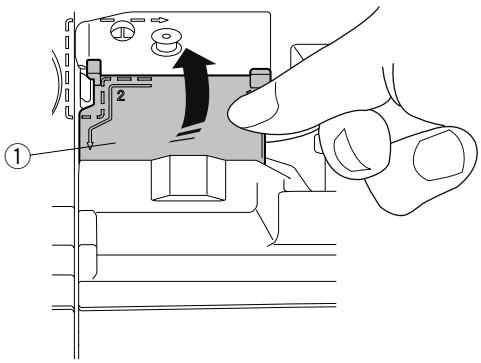

1 Remove the needle thread and remove the thread guide plate by pulling it up.

① Thread guide plate

2

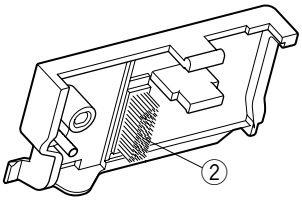

2 Remove lint and dust from the brush on the underside of the thread guide plate using a lint brush.

② Brush on the thread guide plate

3

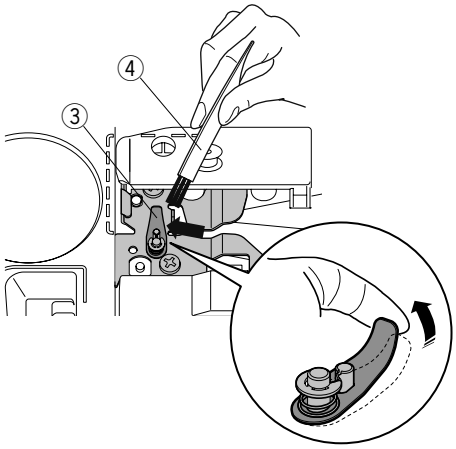

3 Clean the area around and under the pre-tension leaf with the lint brush.

③ Pre-tension leaf
④ Lint brush

NOTE:
Hold the tip of the pre-tension leaf softly and brush out the dust.

4

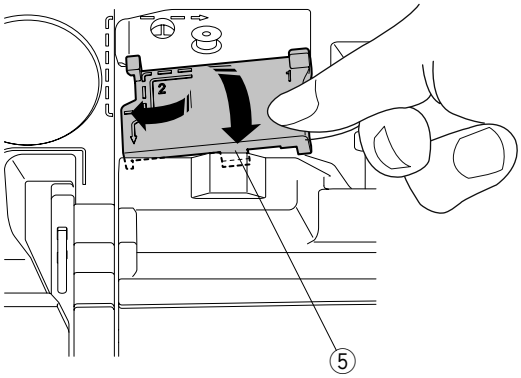

4 Set the thread guide plate on the machine, inserting the tenons into the slots. Push the thread guide plate down to snap it in place.

⑤ Tenon

Problems and Warning Signals

If a buzzer sounds and the visual touch screen shows a warning sign, follow the guidance below.

Warning Sign	Cause	Try this
	The start/stop button is pressed with the foot control connected.	Disconnect the foot control.
	The foot control is out of order.	Contact the service center or the store from whom the machine was purchased.
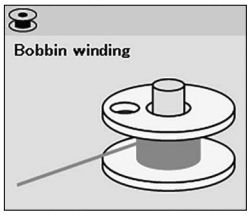	The bobbin winder spindle is shifted to the right.	Shift the bobbin winder spindle to the left for stitching.
	The machine will stop if the buttonhole is sewn without lowering the buttonhole lever.	Lower the buttonhole lever and start the machine again.
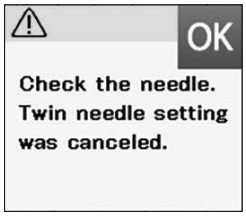	The twin needle key is pressed when the twin needle sign is indicated on the visual touch screen.	Replace the twin needle with a single needle and press the OK key.
	The machine is started without lowering the feed dogs with button sewing selected.	Lower the feed dogs.
	The machine is started with the feed dogs lowered.	Raise the feed dogs unless you want to sew with the feed dogs lowered.
	The needle plate is removed.	Attach the needle plate. Check if the needle plated is attached properly.
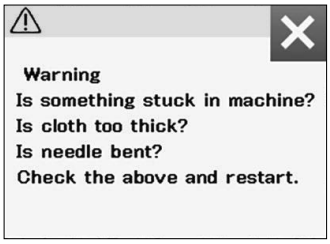	The machine is halting due to overload.	Wait for at least 15 seconds to restart. Remove tangled threads around take-up lever, hook race and thread cutter device.

Troubleshooting

Condition	Cause	Reference
The needle thread breaks	1. The needle thread is not threaded properly. 2. The needle thread tension is too tight. 3. The needle is bent or blunt. 4. The needle is incorrectly inserted. 5. The needle thread is not set under the presser foot when start sewing. 6. The fabric is moved too fast when stitching free motion quilting. 7. The thread is tangled around the spool.	Page 15 Page 36 Change the needle. Page 18 Page 28 Page 95 Use the spool holder.
The bobbin thread breaks	1. The bobbin thread is not threaded properly in the bobbin holder. 2. Lint has collected in the bobbin holder. 3. The bobbin is damaged and does not turn smoothly.	Page 14 Page 105 Change the bobbin.
The needle breaks	1. The needle is incorrectly inserted. 2. The needle is bent. 3. The needle clamp screw is loose. 4. The needle is too fine for the fabric being used. 5. An inappropriate presser foot is used.	Page 18 Change the needle. Page 18 Page 18 Use the correct foot.
Skipped stitches	1. The needle is incorrectly inserted, bent or blunt. 2. The needle and/or threads are not suitable for the work being sewn. 3. A blue tip needle is not being used for sewing stretch, very fine fabrics and synthetics. 4. The needle thread is not threaded properly. 5. A poor quality needle is used. 6. A purple tip needle is not being used for sewing thick fabrics, denims and across the hem.	Page 18 Page 18 Page 18 Page 15 Change the needle. Page 18
Seam puckering	1. The needle thread tension is too tight. 2. The needle thread is not threaded properly. 3. The needle is too heavy for the fabric being sewn. 4. The stitch length is too long for the fabric. 5. The foot pressure is not adjusted properly. 6. A stabilizer is not used when sewing very fine fabrics.	Page 36 Page 15 Page 18 Make stitch shorter. Page 36 Apply a stabilizer.
The fabric is not feeding smoothly	1. The feed dogs are packed with lint. 2. The stitches are too fine. 3. The feed dogs are not raised after “drop feed” sewing.	Page 105 Make stitch longer. Page 24
Loops on the seams	1. The needle thread tension is too loose. 2. The needle is too thick or too fine for the fabric.	Page 36 Page 18
The machine does not run	1. The machine is not plugged in. 2. Thread has been caught in the hook race. 3. The start/stop button is used for ordinary sewing with the foot control plugged in.	Page 8 Page 105 Page 9
Buttonhole sewing is not sewn properly	1. The stitch density is not suitable for the fabric being sewn. 2. The interfacing has not been used for the stretch or synthetic fabric. 3. The buttonhole lever is not lowered.	Page 44 Apply an interfacing. Page 42
The machine is noisy	1. Thread has been caught in the hook race. 2. Lint has built up in the hook race or bobbin holder.	Page 105 Page 105
Auto thread cutting failed	1. Thread is too thick for the auto thread cutting. 2. Threads have been caught in the thread cutter mechanism.	Page 29 Page 105
Pattern selection keys are grayed out.	1. The straight stitch needle plate is attached to the machine. 2. Dual feed key is on. 3. Twin needle key is on.	Page 22 Page 31 Page 63
Pattern selection keys do not work	1. The key position is out of alignment.	Page 99
The needle thread appears on the wrong side of the fabric when the stitch width value is larger than “7.0”.	1. Thread tension is not balanced.	Page 36

It is not abnormal for a faint humming sound to be heard from the internal motors.
The visual touch screen may become warm after several hours of continuous use.

Formatting USB Flash Drives

NOTE:
Formatting of USB flash drive must be carried out on a personal computer using Microsoft Windows.*

For Windows 11 and 10 users, screen shot samples using Windows 11 are shown.

1

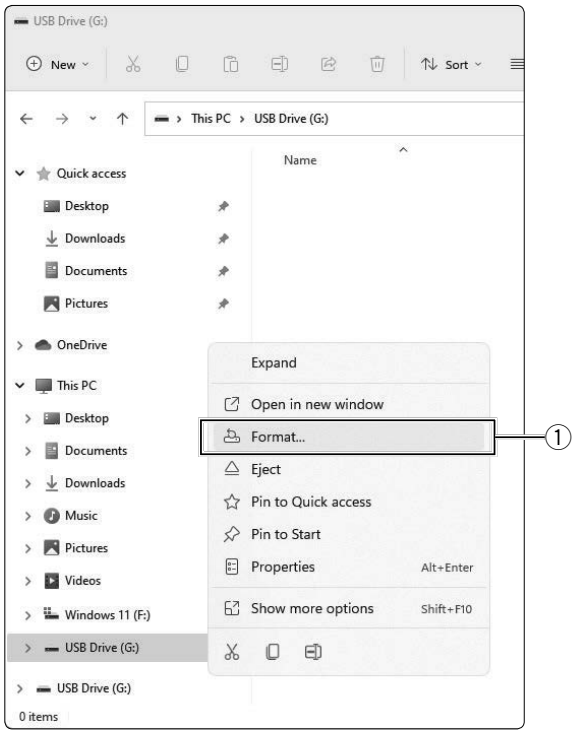

1 Using File Explorer, right click on the USB flash drive. Click format.
① Format

2 3 4

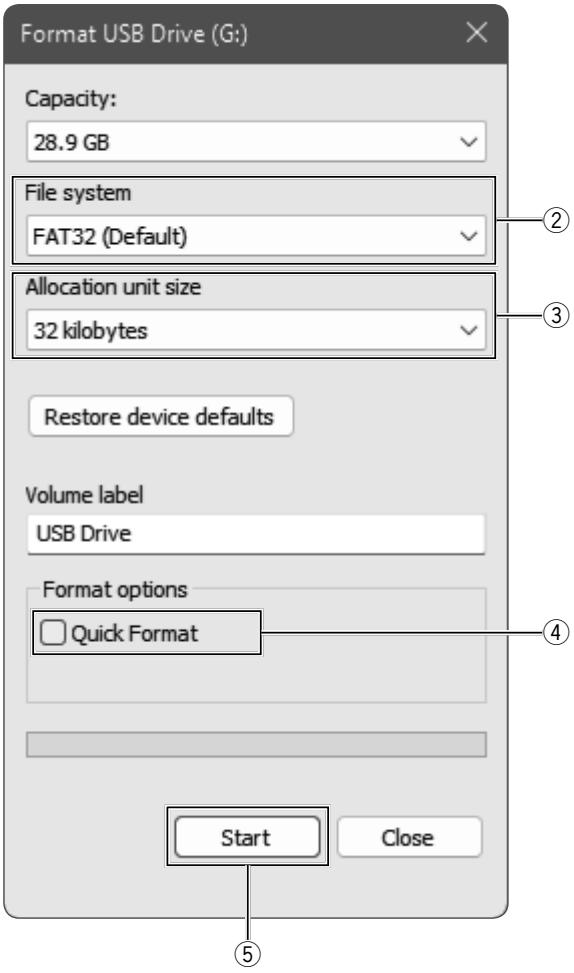

2 Format dialogue will be displayed. Select FAT16 or FAT32 from file system.
② File system

NOTE:
If FAT16 or FAT32 cannot be selected, use other PC. Or use other USB flash drive which can be read.

3 From allocation unit size, select a size of 32 kilobytes or less.
③ Allocation unit size

NOTE:
Do not check the quick Format.
④ Quick Format

4 Click the start key.
⑤ Start key

* Windows is a registered trademark of Microsoft Corporation.

5

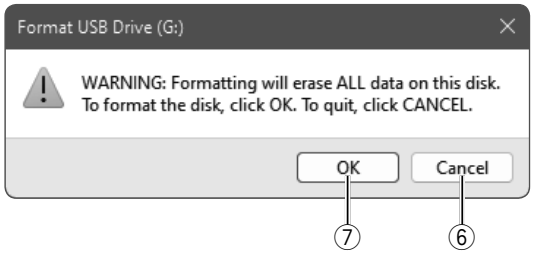

6

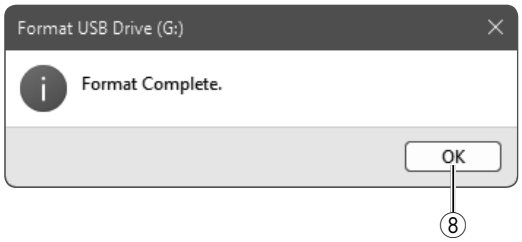

5 After the start key is clicked, the confirmation message will be displayed.

NOTE:
If there is any important data remaining on the USB flash drive, click the cancel key.
After saving the data elsewhere, begin the process again from 1.

⑥ Cancel key

Click the OK key to begin formatting.

⑦ OK key

6 A message will be displayed when the formatting is complete.

Click the OK key.

⑧ OK key

Stitch Chart

Utility (U)

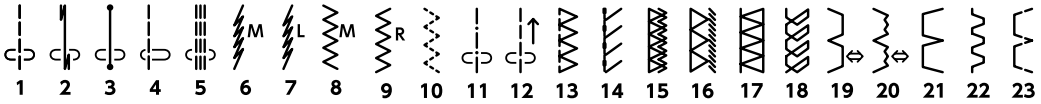

Buttonhole (B)

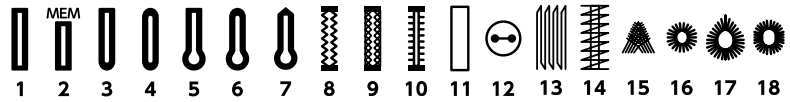

Applique (A)

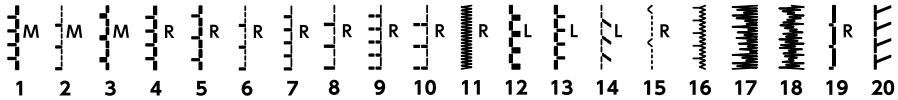

Heirloom (H)

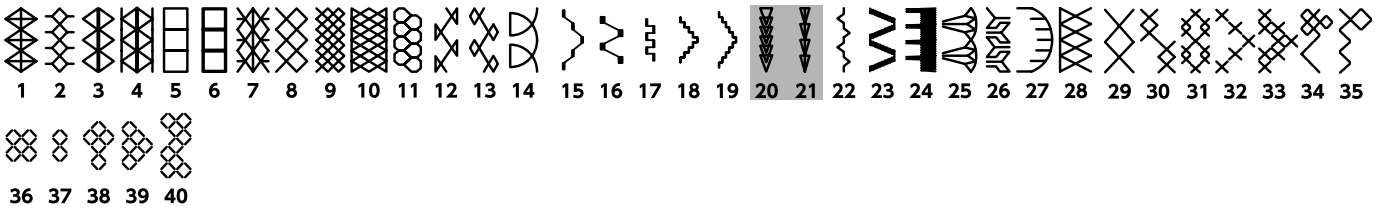

Quilt (Q)

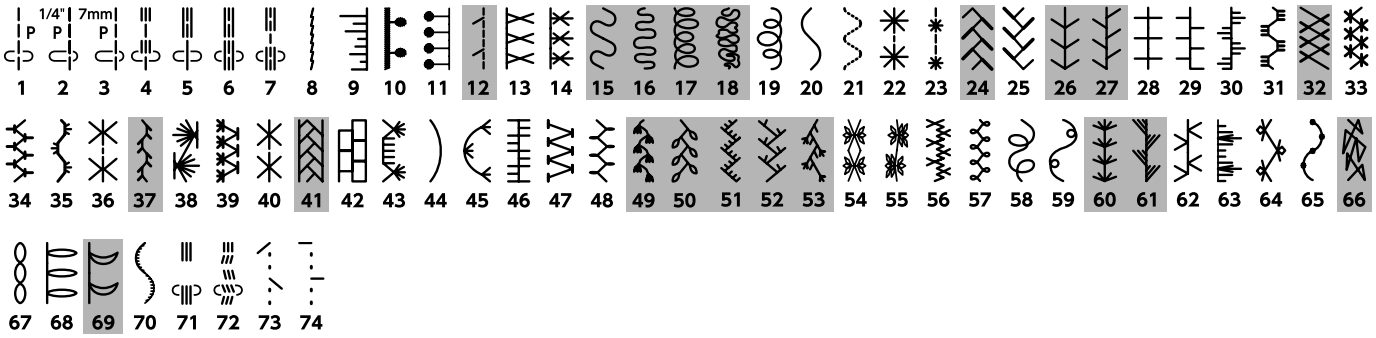

Satin (S)

Bridge (BR)

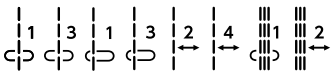

Decorative (D)

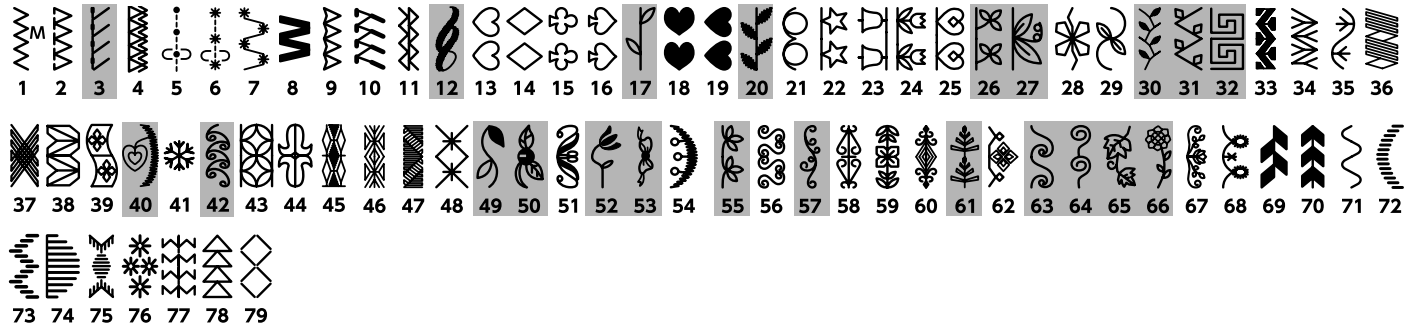

Long (L)

* Stitch patterns marked with grey can be flipped vertically. (Horizontal mirror image)

Stitch Chart

Pictograph (P)

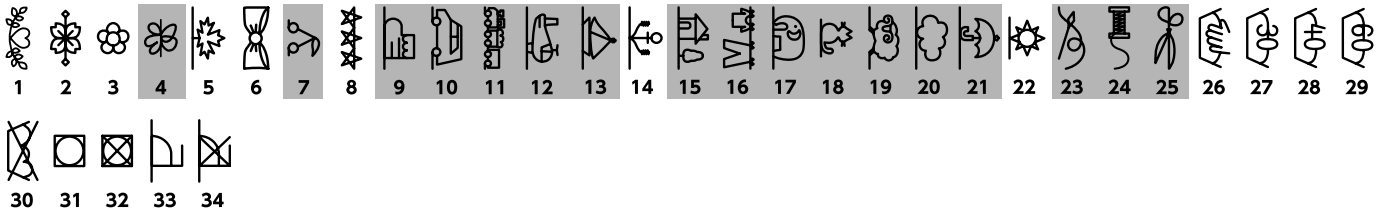

Play (PL)

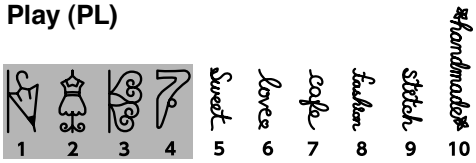

Stitches for the straight stitch needle plate

Utility (U)

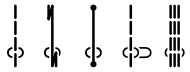

Quilt (Q)

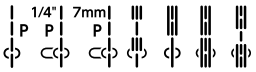

Stitches for the professional grade needle plate

Utility (U)

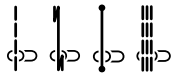

Quilt (Q)

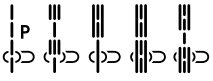

* Stitch patterns marked with grey can be flipped vertically. (Horizontal mirror image)

Stitch Chart (Monogram)

Block

A B C D E F G H I J K L M N
O P Q R S T U V W X Y Z . □ □ □

a b c d e f g h i j k l m n
o p q r s t u v w x y z . □ □ □

1 2 3 4 5 6 7 8 9 0 & _ $ @ . • ,
? ¿ ! ¡ ‘ ’ < > ( ) − + = / // % ~ :

À Á Â Ã Ä Å Æ Ç È É Ê Ë Ì Í Î Ï Ñ
Ò Ó Ô Õ Ö Ø Ù Ú Û Ü ß Ą Ć Ę Ğ İ Ĳ
Ł Ń Ň Œ Ś Ş Ý Ź Ż Ž

à á â ã ä å æ ç è é ê ë ì í î ï ñ
ò ó ô õ ö ø ù ú û ü ß ą ć ę ğ ı ĳ
ł ń ň œ ś ş ý ź ż ž

Script

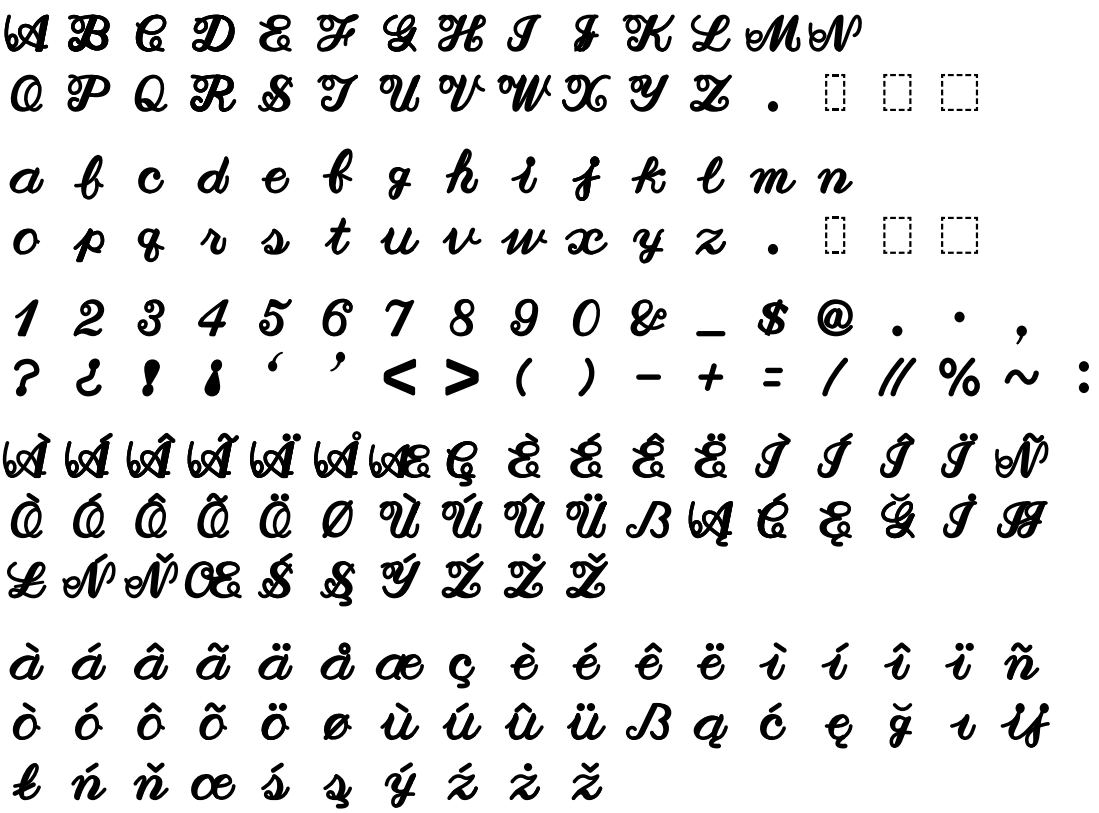

Stitch Chart (Monogram)

Broadway

A B C D E F G H I J K L M N
O P Q R S T U V W X Y Z . □ □ □

a b c d e f g h i j k l m n
o p q r s t u v w x y z . □ □ □

1 2 3 4 5 6 7 8 9 0 & _ $ @ . · ,
? ¿ ! ¡ ‘ ’ < > ( ) – + = / // % ~ :

À Á Â Ã Ä Å Æ Ç È É Ê Ë Ì Í Î Ï Ñ
Ò Ó Ô Õ Ö Ø Ù Ú Û Ü ß Ą Ć Ę Ğ İ Ĳ
Ł Ń Ň Œ Ś Ş Ý Ź Ż Ž

à á â ã ä å æ ç è é ê ë ì í î ï ñ
ò ó ô õ ö ø ù ú û ü ß ą ć ę ğ ı ĳ
ł ń ň œ ś ş ý ź ż ž

Block (9 mm)

A B C D E F G H I J K L M N
O P Q R S T U V W X Y Z . □ □ □

1 2 3 4 5 6 7 8 9 0 & _ $ @ . · ,
? ¿ ! ¡ ‘ ’ < > ( ) – + = / // % ~ :

This page is left intentionally blank

This page is left intentionally blank